0020013349-02.06.05

Instructions for Use Installation and Servicing

To be left with the user

24cxi
G.C. No. 47-047-23

30cxi
G.C. No. 47-047-24

38cxi
G.C. No. 47-047-27

High Efficiency
Condensing
Combination Boilers

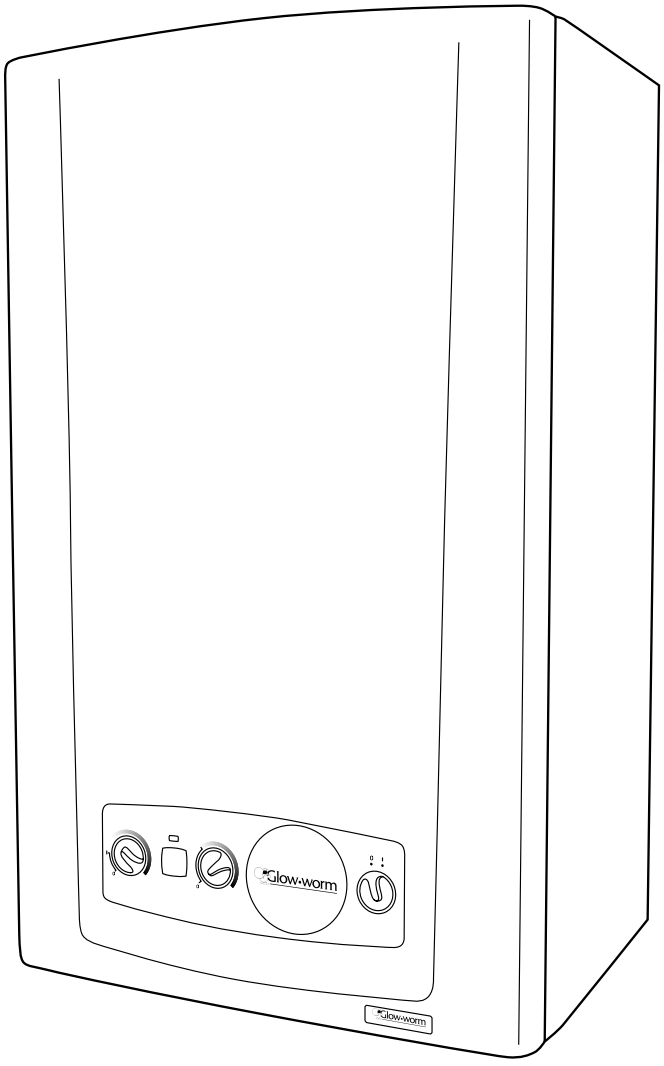

12175

Glow•worm
High Efficiency First

Glow-worm, Nottingham Road, Belper, Derbyshire. DE56 1JT
www.glow-worm.co.uk

Guarantee Registration

Thank you for installing a new Glow-worm appliance in your home.
Glow-worm appliances are manufactured to the very highest standard so we are pleased to offer our customers a Comprehensive Guarantee.
This product is guaranteed for 24 months from the date of installation or 30 months from the date of manufacture, whichever is the shorter, for parts. In addition this product is guaranteed for 12 months from the date of installation or 18 months from the date of manufacture, whichever is the shorter, for labour.
The second year of the parts guarantee, from the beginning of the 13th month onwards after installation or manufacture, is conditional upon the boiler having been serviced by a CORGI registered gas installer, in accordance with the manufacturer's recommendations. We strongly recommend regular servicing of your gas appliance, but where the condition is not met, any chargeable spare parts or components issued within the applicable guarantee period still benefit from a 12 month warranty from the date of issue by the manufacturer.

We recommend you complete and return as soon as possible your guarantee registration card.

If your guarantee registration card is missing you can obtain a copy or record your registration by telephoning the Glow-worm Customer Service number 01773 828100.

For customer service call:

01773 828100

Technical helpline: 01773 828300

For General and Sales enquiries:

Tel. 01773 824639

Fax: 01773 820569

To register your Glow-worm appliance call:

0800 073 2142

CE

benchmark™ COLLECTIVE MARK

The code of practice for the installation, commissioning & servicing of gas central heating

Contents

The instructions consist of three parts, User, Installation and Servicing Instructions. The instructions are an integral part of the appliance and must, to comply with the current issue of the Gas Safety (Installation and Use) Regulations, be handed to the user on completion of the installation.

CONTENTS	DESCRIPTION	SECTION	PAGE No.
INTRODUCTION	Important Information		4
	General Information		5
	Manual Handling		5
INSTRUCTIONS FOR USE	Appliance Safety Devices		7
	Maintenance and Servicing		7
	Operating the Boiler		8
INSTALLATION INSTRUCTIONS	Technical Information	1	10
	Boiler Location and Ventilation	2	13
	Flue Location and Ventilation	3	14
	Heating System	4	16
	Domestic Hot Water System	5	18
	Installation Preparation	6	18
	Gas/Water & Appliance Connection	7	21
	Safety Discharge Valve and Condensate Connection	8	22
	Flue Preparation Telescopic and Standard Flue	9	24
	Electrical Connection	10	27
	Commissioning	11	29
SERVICING INSTRUCTIONS	Servicing	12	32
	Fault Finding	13	36
	Replacement of Parts	14	40
	Spare Parts	15	51

Important Information

WARNINGS

Gas Leak or Fault

Turn off the gas emergency control valve immediately. Eliminate all sources of ignition, i.e.smoking, blowlamps, hot air guns etc. Do not operate electrical lights or switches either on or off. Open all doors and windows,ventilate the area.

Sheet Metal Parts

This boiler contains metal parts (components) and care should be taken when handling and cleaning, with particular regard to edges.

Sealed Components

Under no circumstances must the User interfere with or adjust sealed parts.

Gas Category

This boiler is for use only on G20 natural gas, but the 30cxi may be converted for use on G31 gas (Propane L.P.G.).

Gas Safety (Installation and Use) Regulations

In your own interests and that of safety, it is the Law that ALL gas appliances are installed by a **competent person** in accordance with the current issue of the above regulations.

Testing and Certification

This boiler is tested and certificated for safety and performance. It is, therefore, important that no alteration is made to the boiler, without permission, in writing, by Glow-worm.

Any alteration not approved by Glow-worm, could invalidate the certification, boiler warranty and may also infringe the current issue of the statutory requirements.

CE Mark

This boiler meets the requirements of Statutory Instrument, No. 3083 The Boiler (Efficiency) Regulations, and therefore is deemed to meet the requirements of Directive 92/42/EEC on the efficiency requirements for new hot water boilers fired with liquid or gaseous fuels.

Type test for purposes of Regulation 5 certified by: Notified body 0087.

Product/production certified by: Notified body 0086.

The CE mark on this appliance shows compliance with:

1. Directive 90/396/EEC on the approximation of the laws of the Member States relating to appliances burning gaseous fuels.

2. Directive 73/23/EEC on the harmonisation of the Laws of the Member States relating to electrical equipment designed for use within certain voltage limits.

3. Directive 89/336/EEC on the approximation of the Laws of the Member States relating to electromagnetic compatibility.

Control of Substances Hazardous to Health

Under Section 6 of The Health and Safety at Work Act 1974, we are required to provide information on substances hazardous to health.

The adhesives and sealants used in this appliance are cured and give no known hazard in this state.

Insulation Pads / Ceramic Fibre

These can cause irritation to skin, eyes and the respiratory tract.

If you have a history of skin complaint you may be susceptible to irritation. High dust levels are usual only if the material is broken.

Normal handling should not cause discomfort, but follow normal good hygiene and wash your hands before eating, drinking or going to the lavatory.

If you do suffer irritation to the eyes or severe irritation to the skin seek medical attention.

Electrical Supply

The boiler must be earthed.

All system components shall be of an approved type and all wiring to current I.E.E. wiring regulations.

External wiring must be correctly earthed, polarised and in accordance with the relevant standards.

In GB this is BS 6891.

In IE this is the current edition of I.S.813 "Domestic Gas Installations".

The boiler must be connected to a permanent 230V ac, 50Hz supply.

Connection of the whole electrical system of the boiler, including any heating controls, to the electrical supply must be through one common isolator and must be fused 3 Amp maximum.

Isolation should be by a double pole switched fused spur box, with a minimum gap of 3mm for both poles. The fused spur box should be readily accessible and preferably adjacent to the appliance. It should be identified as to its use.

Alternatively connection can be made through an unswitched shuttered socket and 3A fused 3-pin plug both to the current issue of BS 1363 may be used, provided they are not used in a room containing a bath or shower.

Wiring to the boiler must be PVC 85°C insulated cable, not less than 0.75mm^{2} (24/0.20mm).

General Information

General Note

This boiler is designed for use as part of a sealed water central heating system with fully pumped circulation. The pump, expansion vessel and associated safety devices are all fitted within the boiler.

Once the controls are set the boiler operates automatically.

Please read these instructions and follow them carefully for the correct installation and economical use of your boiler.

Water Treatment

In the case of an existing installation, it is **ESSENTIAL** that prior to installing the new boiler the system is thoroughly flushed. For optimum performance after installation of a new system, the boiler and its associated central heating system should also be flushed. Flushing should be carried out in accordance with BS7593: 1992 using a cleanser such as Sentinel X300 or X400, Fernox restorer or Salamander corrosion guard cleaner.

For long-term corrosion protection, after flushing, an inhibitor suitable for stainless steel exchangers should be used, refer to the current issue of BS 5449 and BS 7593 on the use of inhibitors in central heating systems. Examples are Sentinel X100 Fernox protector or Salamander corrosion guard inhibitor.

Compartment or Cupboard Installations

If the boiler is fitted into a compartment or cupboard it does not require ventilation openings.

Do not use the compartment or cupboard for storage.

Clearances

If fixtures are positioned close to the boiler, space must be left as shown in section 2. Enough space must also be left in front of the boiler to allow for servicing.

Condensate Drain

The condensate drain, see section 8.2, must not be modified or blocked.

Pluming from flue terminal

Like all condensing boilers this appliance will produce a plume of condensation from the flue terminal in cool weather. This is due to the high efficiency and hence low flue gas temperature of the boiler. It is normal and not a fault indication.

Cleaning

The boiler casing can be cleaned using a mild liquid detergent with a damp cloth, then a dry cloth to polish.

Do not use any form of abrasive or solvent cleaner as you may damage the paintwork.

Electrical Supply

If the mains electricity and gas are to be turned off for any long periods during severe weather, it is recommended that the whole system, including the boiler, should be drained to avoid the risk of freezing. Make sure that, if fitted, the immersion heater in the cylinder is switched off.

NOTE: If you have a sealed water system contact your installation/servicing company as draining, refilling and pressurising MUST be carried out by a **competent person**.

Manual Handling

IMPORTANT. With regards to the Manual Handling Operations, 1992 Regulations, the following lift operation exceeds the recommended weight for a one man lift.

General recommendations when handling

Clear the route before attempting the lift.

Ensure safe lifting techniques are used – keep back straight – bend using legs.

Keep load as close to body as possible.

Do not twist – reposition feet instead.

If 2 persons performing lift, ensure co-ordinated movements during lift.

Avoid upper body/top heavy bending - do not lean forward/ sideways.

Recommend wear suitable cut resistant gloves with good grip to protect against sharp edges and ensure good grip.

Always use assistance if required.

Removal of carton from delivery van

Recommend 2 person lift or 1 person with use of sack truck. If 1 person is performing lift, straddle the load, tilt and place carton into position on truck. Recommend secure appliance onto truck with suitable straps. Ensure safe lifting techniques are used – keep back straight – bend using legs. Keep load as close to body as possible. If 2 persons performing lift, ensure co-ordinated movements during lift. Always use assistance if required.

Carriage of carton from point of delivery to point of installation – ground floor

Recommend 2 person lift or 1 person with use of sack truck. If 1 person is performing lift, straddle the load, tilt and place carton into position on truck. Recommend secure appliance onto truck with suitable straps. Ensure safe lifting techniques are used – keep back straight – bend using legs. Keep load as close to body as possible. If 2 persons performing lift, ensure co-ordinated movements during lift. Clear the route before attempting the lift. If removing boiler from truck straddle the load and tilt forwards to facilitate secure grip. Ensure safe lifting techniques are used – keep back straight – bend using legs. Do not twist – reposition feet instead. Take care to avoid trip hazards, slippery or wet surfaces and when climbing steps and stairs. Always use assistance if required.

Carriage of carton from point of delivery to point of installation – first or higher floor, cellar.

Recommend 2-person lift or 1 person with use of sack truck. If 1 person is performing lift, straddle the load, tilt and place carton into position on truck. Recommend secure appliance onto truck with suitable straps. Ensure safe lifting techniques are used – keep back straight – bend using legs. Keep load as close to body as possible. If 2 persons performing lift, ensure co-ordinated movements during lift. Avoid upper body/top heavy bending - do not lean forward/sideways. Clear the route before attempting the lift. If removing boiler from truck straddle the load and tilt forwards to facilitate secure grip. Ensure safe lifting techniques are used – keep back straight – bend using legs. Do not twist – reposition feet instead. Take care to avoid trip hazards, slippery or wet surfaces and when climbing steps and stairs. Always use assistance if required.

Carriage of carton from point of delivery to point of installation – roofspace.

Recommend 2-person lift. Ensure co-ordinated movements during lift. Avoid upper body/top heavy bending - do not lean forward/sideways. Clear the route before attempting the lift. Take care to avoid trip hazards, slippery or wet surfaces and when climbing steps and stairs. When transferring appliance into roofspace, recommend 1 person to be in roofspace to receive the appliance and other person to be below to pass up and support appliance. Ensure safe lifting techniques are used – keep back straight – bend using legs. Keep load as close to body as possible. Always use assistance if required. It is assumed safe access, flooring and adequate lighting are provided in the roof space. It is recommended a risk assessment of the roof space area be carried out before moving the appliance into the area to take into account access, stability of flooring, lighting and other factors, and appropriate measures taken.

Unpacking of appliance from carton.

Recommend 2 persons unpack appliance from carton. Always keep working area clear. Recommend cut base end of carton and open carton flaps, then tilt boiler forwards from its side onto its base and remove carton by sliding up over the boiler. Ensure safe lifting techniques are used – keep back straight – bend using legs. Keep load as close to body as possible. Always use assistance if required. Dispose of packaging in a responsible manner. Recommend wear suitable cut resistant gloves with good grip to protect against sharp edges and ensure good grip when handling appliance outside packaging.

Positioning of Appliance for Final Installation – no obstructions.

Recommend 2 persons lift appliance to position into place. Fit bracket securely onto wall before lifting appliance into position. Obtain firm grip on front and sides of appliance, lift upwards, ensure stable balance achieved and lift upwards to position in place on bracket. Ensure safe lifting techniques are used – keep back straight – bend using legs - when lifting load from floor level. Do not twist – reposition feet instead. Keep boiler as close as possible to body throughout lift to minimise strain on back. Ensure co-ordinated movements to ensure equal spread of weight of load. Always use assistance if required. Recommend wear suitable cut resistant gloves with good grip to protect against sharp edges and ensure good grip when handling appliance.

Positioning of Appliance for Final Installation – above worktop, foreseeable obstructions etc.

Recommend 2 persons lift appliance to position into place. Fit bracket securely onto wall before lifting appliance into position. Obtain firm grip on front and sides of appliance, lift upwards, onto worktop if practicable. Ensure stable balance achieved and lift upwards to position in place on bracket. If 2 persons positioning onto bracket obtain firm grip at front and sides/base of boiler. Ensure co-ordinated movements during 2 person lifts to ensure equal spread of weight of load. Ensure safe lifting techniques are used – keep back straight – bend using legs - when lifting load from floor level. Do not twist – reposition feet instead. Keep boiler as close as possible to body throughout lift to minimise strain on back. Avoid upper body/top heavy bending - do not lean forward/sideways. Always use assistance if required. Recommend wear suitable cut resistant gloves with good grip to protect against sharp edges and ensure good grip when handling appliance.

Positioning of Appliance for Final Installation – within compartment etc. restricting installation.

Recommend 2 persons lift appliance to position into place, space permitting. Fit bracket securely onto wall before lifting appliance into position. Obtain firm grip on front and sides of appliance, lift upwards, onto worktop if practicable. Ensure stable balance achieved and lift upwards to drop into place onto bracket. If 2 persons positioning onto bracket obtain firm grip at front and sides/base of boiler. Ensure co-ordinated movements during 2 person lifts to ensure equal spread of weight of load. If 1 person positioning onto bracket recommend obtain firm grip supporting base of boiler. Ensure safe lifting techniques are used – keep back straight – bend using legs - when lifting load from floor level. Do not twist – reposition feet instead. Keep boiler as close as possible to body throughout lift to minimise strain on back. Always use assistance if required. Recommend wear suitable cut resistant gloves with good grip to protect against sharp edges and ensure good grip when handling appliance.

Positioning of Appliance for Final Installation – in roof space restricting installation.

Recommend 2 persons lift appliance to position into place, space permitting. Fit bracket securely onto wall before lifting appliance into position. Obtain firm grip on front and sides of appliance, lift upwards, ensure stable balance achieved and lift upwards to drop into place onto bracket. If 2 persons positioning onto bracket obtain firm grip at front and sides/base of boiler. Ensure co-ordinated movements during 2 person lifts to ensure equal spread of weight of load. If 1 person positioning onto bracket recommend obtain firm grip supporting base of boiler. Ensure safe lifting techniques are used - keep back straight – bend using legs - when lifting load from floor level. Do not twist – reposition feet instead. Keep boiler as close as possible to body throughout lift to minimise strain on back. Always use assistance if required. Recommend wear suitable cut resistant gloves with good grip to protect against sharp edges and ensure good grip when handling appliance. It is recommended a risk assessment of the roof space area be carried out before moving the appliance into the area to take into account access, stability of flooring, lighting and other factors, and appropriate measures taken.

Appliance Safety Devices - User Instructions

Electrical Supply Failure Reset Switch

The boiler will not work without an electrical supply.

Normal operation of the boiler should resume when the electrical supply is restored.

Reset any external controls, to resume normal operation of the central heating.

If the boiler does not resume normal operation turn the mains reset switch off and on. If the boiler does not resume normal operation after this the overheat stat may have operated.

Overheating safety

In the event of the boiler overheating the safety devices will cause a safety shutdown. If this happens, call your Installation/ Servicing company.

Safety Discharge Valve

A safety discharge valve and discharge pipe is fitted to the boiler. This valve must not be touched. Should there be any discharge from the pipe, isolate the boiler electrical supply and call your installer or Glow-worm's own service organisation using the telephone number on the inside front cover of this booklet.

Frost protection

The appliance has a built in frost protection device that protects the boiler from freezing. With the gas and electric supplies ON and irrespective of any room thermostat setting, the frost protection device will operate the pump when the temperature of the boiler water falls below 7°C.

The burner will fire if the temperature inside the boiler falls to 3°C.

When the temperature reaches 10°C the boiler stops.

Any other exposed areas of the system should be protected by a separate frost thermostat.

Condensate Drain Blockage

As a safety feature the boiler will stop working if the condensate drain becomes blocked. During freezing conditions this may be due to the forming of ice in the condense drain external to the house. Release an ice blockage by the use of warm cloths on the pipe. The boiler should then restart. Contact your installation/ servicing company if the fault persists.

Maintenance and Servicing - User Instructions

Maintenance and Servicing

To ensure the continued efficient and safe operation of the appliance it is recommended that it is checked and serviced as necessary at regular intervals. The frequency of servicing will depend upon the particular installation conditions and usage, refer to guarantee registration on the inside front cover of this literature.

If this appliance is installed in a rented property there is a duty of care imposed on the owner of the property by the current issue of the Gas Safety (Installation and Use) Regulations, Section 35.

Servicing/maintenance should be carried out by a **competent person** in accordance with the rules in force in the countries of destination.

To obtain service, please call your installer or Glow-worm's own service organisation using the telephone number on the inside front cover of this literature.

Please be advised that the 'Benchmark' logbook should be completed by the installation engineer on completion of commissioning and servicing.

All CORGI Registered Installers carry a CORGI ID card, and have a registration number. Both should be recorded in your benchmark Logbook. You can check your installer is CORGI registered by calling CORGI direct on: 01256 372300.

Spare Parts

Remember, when replacing a part on this appliance, use only spare parts that you can be assured conform to the safety and performance specification that we require. Do not use reconditioned or copy parts that have not been clearly authorised by Glow-worm.

If a part is required contact Glow-worm's own service organisation using the telephone number on the inside front cover of this booklet.

Please quote the name of the appliance, this infomation will be on the name badge on the front of the appliance.

If in doubt seek advice from the local gas company or Glow-worm's own service organisation using the telephone number on the inside front cover of this booklet.

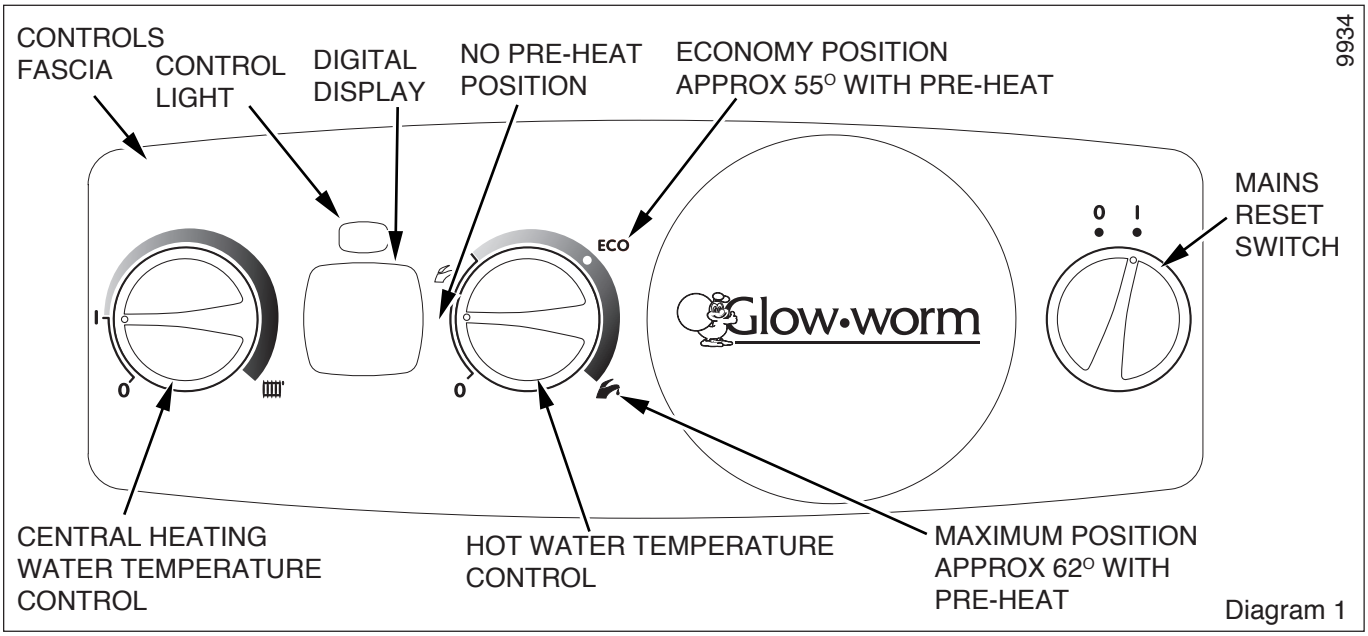

Diagram 1

OPERATION OF THE BOILER

1. Check that all isolating valves on the boiler are open and that water flows from the hot water tap.
2. If you are in any doubt about the boiler being filled with water contact your installer or Glow-worm's own service organisation using the telephone number on the inside front cover of this booklet. **Do not operate the boiler without water.**
3. Check that the electrical supply to the boiler is ON and set any remote controls as required..
4. With the User controls in their "OFF" (**0**) positions, turn the Mains Reset Switch to the ON (**1**) position, the running lamp will initially illuminate (green) then go off, the system pressure will be displayed and should read on the digital display, at least 0.7bar (recommended 1.0bar), if less, pressurise as described in the System Pressurisation section.

USER CONTROLS

CENTRAL HEATING CONTROL

1. Turn the central heating water temperature control "ON", the lighting sequence will begin, the running lamp will illuminate (green) to indicate the boiler has lit, the system temperature will now be displayed instead of system pressure.

   The temperature of the central heating water can be adjusted by turning the central heating water temperature control to desired setting between **1** 'Min' and 'Max'. Maximum setting is appoximately 82°C.

   Set the control to '0' to switch off heating.

   If the boiler fails to light, reset the controls, see paragraph below, **TO RESET**

   If a fault occurs the running lamp will flash red and a fault code will appear on the digital display.

DOMESTIC HOT WATER CONTROL

2. Position **0** - hot water OFF. Turn hot water temperature control between **0** to for hot water 62°C with no pre-heat. Turn hot water temperature control between and for hot water, 40°C - 62°C with pre-heat.

   Pre-heat is a function that provides hot water with minimum delay.

   The **ECO** setting is recommended and ideally suited to normal family use (showers, washing up etc.).

   Positions between **ECO** and are for occasional use, for water above 55°C approx.

TO RESET

3. Turn the Mains Reset Switch to **0**, wait for 5 seconds, turn Mains Reset Switch to **1**, the boiler is reset.

   If the fault persists contact your installer/service provider using the telephone number on the inside font cover of this booklet.

TO TURN THE BOILER OFF

4. Turn the Mains Reset Switch to the OFF (**0**) position.

   Turn the gas supply OFF at the gas service cock if the boiler is to be out of use for some time.

Digital Display/ System Pressurisation

The digital display normally shows the operating temperature of the unit when there is a central heating demand and gives a pressure reading when there is no demand or when the appliance is in the domestic hot water mode.

If the digital display shows pressure less than 0.7bar, re-pressurise the system to 1bar by gently opening the built in filling tap underneath the boiler, see diagram 2. A tap extension is provided to facilitate this. Ensure the tap is closed. If the system repeatedly loses pressure, YOU MUST CONTACT YOUR INSTALLER OR GLOW-WORM'S OWN SERVICE ORGANISATION USING THE TELEPHONE NUMBER ON THE INSIDE FRONT COVER OF THIS BOOKLET.

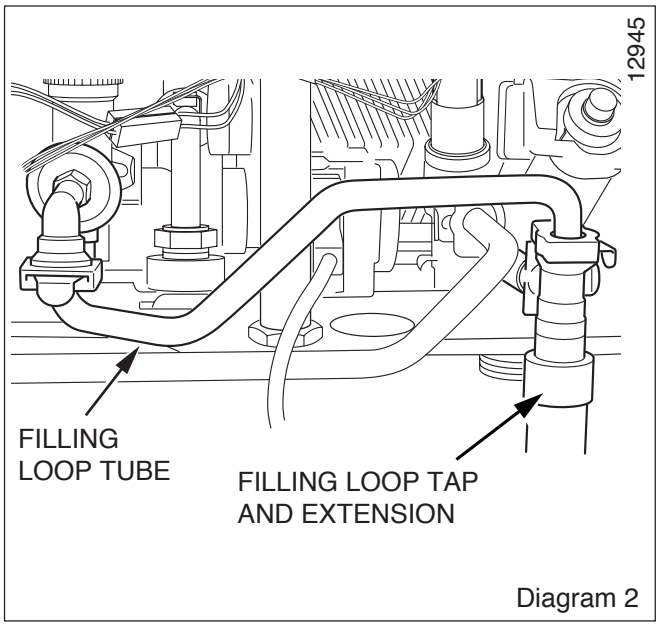

Diagram 2

To Turn the Boiler Off

There is a mains reset switch on the right hand side of the controls fascia, which will isolate the boiler. However, it is preferable to leave the electrical supply on whenever possible to permit operation of the built-in frost protection (see 'Protection Against Freezing') and daily pump and valve exercise.

To turn off the central heating use the room thermostat or programmer.

To turn off the domestic hot water turn the hot water temperature control knob to the minimum setting.

For holiday mode turn both of the temperature knobs to the minimum setting.

To turn off the boiler for servicing, isolate it from the electrical supply. To turn it on again follow the instructions given in 'Operation of the Boiler'.

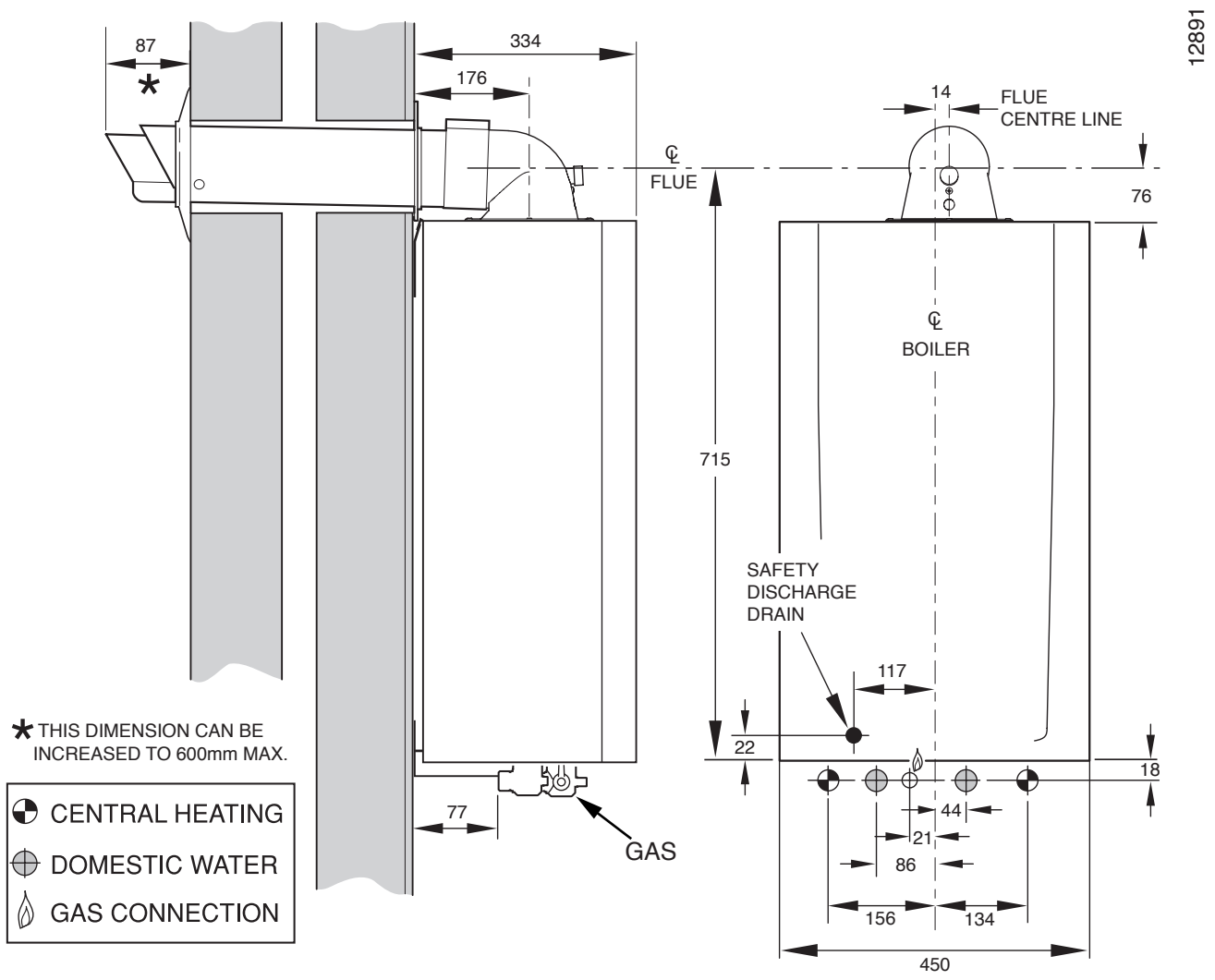

GENERAL ARRANGEMENT Diagram 1.1

1.1 IMPORTANT NOTICE

The boiler is supplied in one carton, which includes a fittings pack, pipe pack, fixing jig, condense pipe, and documentation pack, see diagram 6.1 and 6.1a.

The flue is supplied seperately.

This boiler is for use only on **G20 natural gas**, but the 30cxi may be converted for use on G31 gas (Propane L.P.G.).

Where no British Standards exists, materials and equipment should be fit for their purpose and of suitable quality and workmanship.

The installation of this boiler must be carried out by a **competent person** in accordance the rules in force in the countries of destination.

Manufacturer's instructions must not be taken as overriding statutory requirements.

1.2 Statutory Requirements

In GB the installation of the boiler must be carried out by a competent person as described in the following regulations:

The manufacturer's instructions supplied.

The Gas Safety (Installation and Use) Regulations.

The appropriate Buildings Regulations either The Building Regulations, The Building Regulations (Scotland),The Building Regulations (Northern Ireland).

The Water Fittings Regulations or Water byelaws in Scotland.

The Health and Safety at Work Act, Control of Substances Hazardous to Health (COSHH).

The Current I.E.E. Wiring Regulations.

Where no specific instructions are given, reference should be made to the relevant British Standard Code of Practice.

In IE, the installation must be carried out by a competent person and installed in accordance with the current edition of I.S.813 "Domestic Gas Installations", the current Building Regulations and reference should be made to the current ETCI rules for Electrical Installation.

In GB the following Codes of Practice apply:

BS4814, BS6798, BS5440 Part 1 and 2, BS5546 Part 1, BS5449, BS6891, BS6700, BS7074 Part 1 and 2, BS7593, BS7671.

In IE: I.S.813, BS5546, BS 5449, BS 7074, BS 7593.

Manufacturer's instructions must not be taken as overriding statutory requirements.

Note: For further information, see the current issue of the Building Regulations, approved document L1 (in the UK) and the references:

1) GIL 59, 2000: Central heating system specification (CheSS) and

2) GPG 302, 2001: Controls for domestic central heating system and hot water. BRECSU.

1 Technical Information

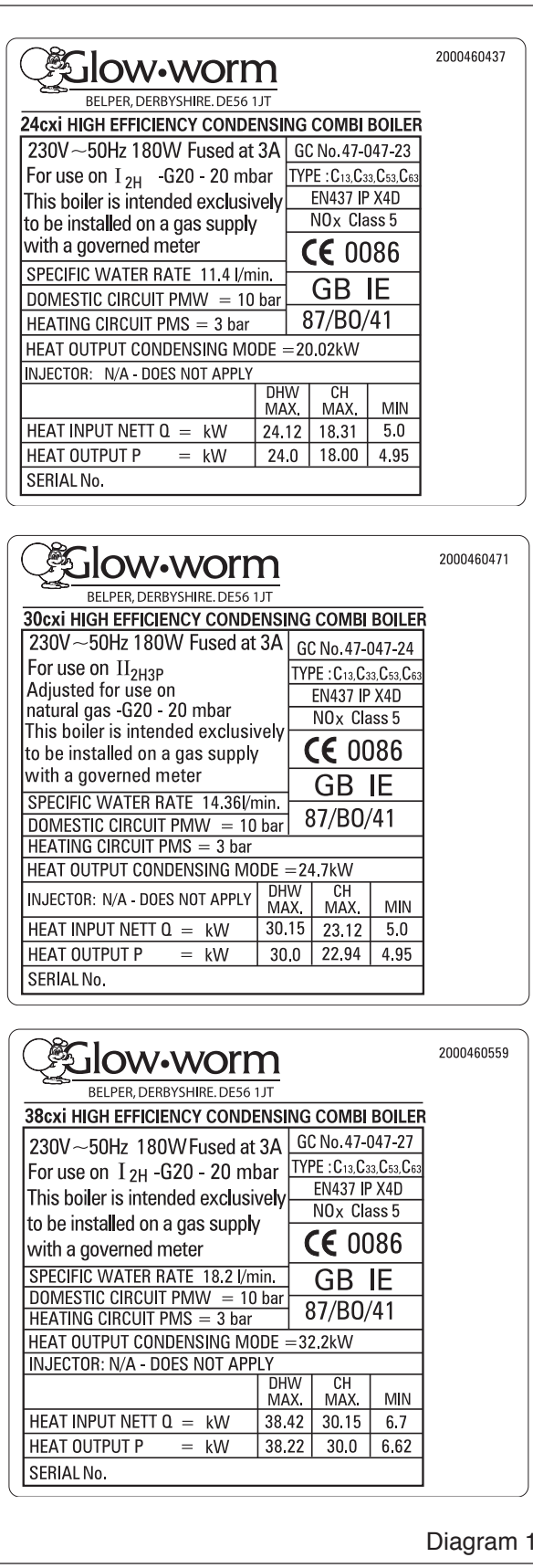

Diagram 1.2

TABLE 1

	24cxi	30cxi	38cxi
Lift Weight	41kg(90lb)	42kg(92.5lb)	44kg(97lb)
Total Weight (installed)	44kg(97lb)	45kg(99lb)	47kg(103.5lb)
● Gas connection		22mm copper	
● Heating and return		22mm copper	
● Domestic hot water		15mm copper	
Safety valve		Preset 3bar (43.5lbf/in²)	
Safety valve discharge		15mm copper	
■ Expansion vessel capacity		8 litres (1.76 gallons)	
Charge pressure		0.5bar (7.3lbf/in²)	
Heating system minimum pressure		0.7bar (10.1lbf/in²)	
D.H.W Max. working pressure		10bar (145lbf/in²)	
Minimum working pressure for max. domestic flow rate		0.2bar (2.9lbf/in²)	
Max. Domestic hot water flow rate at 35°C rise	24 cxi	9.8L/min.	
	30 cxi	12.3L/min.	
	38 cxi	15.5L/min.	
Min. Domestic hot water flow rate	24/30/38cxi	1L/min.	
Maximum flow temperature	63°C		
■ Maximum heating system water content using pressurised at 1bar.	130 litres (28.6 gallons) fitted expansion vessel, at 75°C average system temperature		
Electrical supply	230V~50Hz		
Electrical rating	180W fused 3A		
IP classification	X4D		
Internal Fuse rating On PCB	630mAT		

● Ball valves are fitted in water and gas connections.

■ For larger systems use an additional expansion vessel.

Certification

This boiler certificated to the current issue of EN 483 : 2000 for performance and safety.

It is important that no alteration is made to the boiler, without permission, in writing, from Glow-worm.

Any alteration that is not approved by Glow-worm, could invalidate the warranty and could also infringe the current issue of the Statutory Requirements.

1.3 Gas Supply

The gas installation must be in accordance with the relevant standards.

In GB this is BS6891.

In IE this is the current edition of I.S.813 "Domestic Gas Installations".

The supply from the governed meter must be of adequate size to provide a steady inlet working pressure of 20mbar (8in wg) at the boiler.

On completion, test the gas installation for soundness using the pressure drop method and suitable leak detection fluid, purge in accordance with the above standard.

1.4 Technical Data

All dimensions are given in millimetres (except as noted).

See diagrams 1.1 and Tables 1 and 2.

The data label is positioned on the inner door, refer to diagram 1.2.

The Seasonal Efficiency Domestic Boilers UK (SEDBUK) is Class 'A' : 24cxi - 90.3%, 30cxi - 90.3% & 38cxi - 90.6%.

The value is used in the UK Government's Standard Assessment Procedure (SAP) for energy rating of dwellings. The test data from which it has been calculated has been certified by B.S.I.

1.5 Condensate Drain

A plastic drain pipe must be fitted to allow discharge of condensate to a drain.

Condensate should, if possible, be discharged into the internal household draining system. If this is not practical, discharge can be made externally into the household drainage system or a purpose designed soak away, see section 8.2 for more details.

1.6 Upward Piping Kits

Where the domestic hot water and heating flow and return pipes come from above the boiler or just the heating flow and return pipes, upward piping kits are available to facilitate this.

Central Heating only, part No. A2051000

Central Heating and DHW, part No. A2050900

Contact Glow-worm for further details.

1.7 Optional Programmer Kit

An optional programmer for fitting in the boiler is available, Pt. no. A20087 electromechanical or A20087 digital.

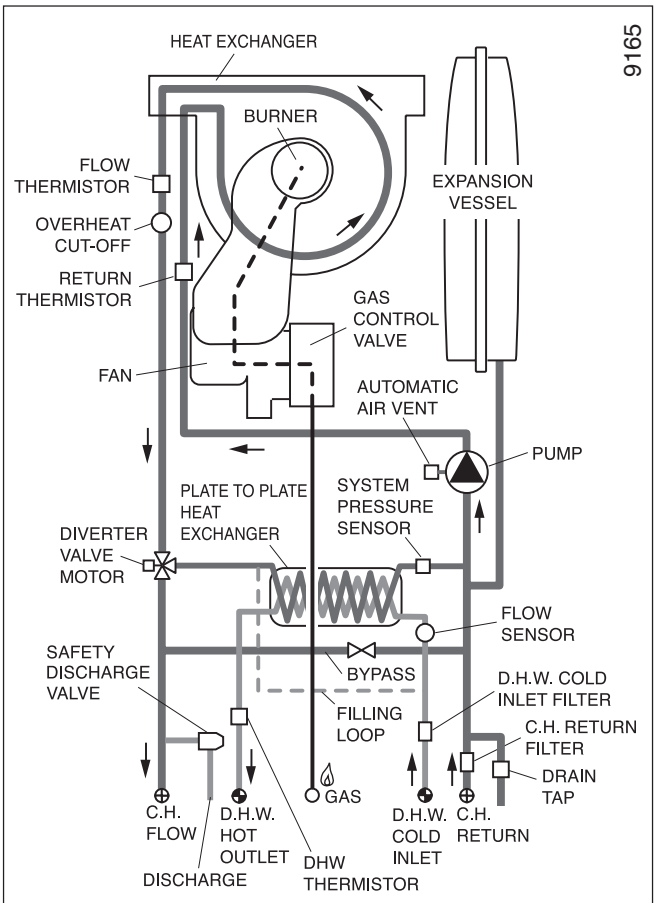

SCHEMATIC LAYOUT OF BOILER Diagram 1.3

TABLE 2

24 cxi			
BURNER %CO_2	Case Off	9.1 +0.2 -0.5	
	Case On	9.3 +0.3 -0.5	
APPROXIMATE GAS RATE (after 10 mins. from cold)		**MIN**	**MAX**
	m^3/h	**0.48**	**2.24**
	ft^3/h	**16.8**	**79**
30 cxi			
BURNER %CO_2	Case Off	9.1 +0.2 -0.5	
	Case On	9.3 +0.3 -0.5	
APPROXIMATE GAS RATE (after 10 mins. from cold)		**MIN**	**MAX**
	m^3/h	**0.48**	**2.8**
	ft^3/h	**16.8**	**99**
38 cxi			
BURNER %CO_2	Case Off	8.8 +0.2 -0.5	
	Case On	9.0 +0.3 -0.5	
APPROXIMATE GAS RATE (after 10 mins. from cold)		**MIN**	**MAX**
	m^3/h	**0.62**	**3.6**
	ft^3/h	**21.8**	**127**

2 Boiler Location and Ventilation

2.1 Location

This boiler is not suitable for outdoor installation.

This boiler may be installed in any room, although particular attention is drawn to the installation of a boiler in a room containing a bath or shower where reference must be made to the relevant requirements.

This boiler is suitable for installation in bathroom zones 2 and 3.

In GB this is the current I.E.E. WIRING REGULATIONS and BUILDING REGULATIONS.

In IE reference should be made to the current edition of I.S.813 "Domestic Gas Installations" and the current ETCI rules.

2.2 Clearances

The boiler should be positioned so that at least the minimum operational and servicing clearances are provided, see diagram 2.1.

Additional clearances may be beneficial around the boiler for installation and servicing.

For flue installations where external access is not practicable, consideration should be given for the space required to insert the flue internally, which may necessitate clearance larger than those specified in diagram 2.1.

2.3 Timber Frame Buildings

If the boiler is to be installed in a timber frame building it should be fitted in accordance with the Institute of Gas Engineers document IGE/UP/7/1998. If in doubt seek advice from the local gas undertaking or Glow-worm.

2.4 Room Ventilation

The boiler is room sealed, so when it is installed in a room or space, a permanent air vent is not required.

2.5 Cupboard or Compartment Ventilation

Due to the high efficiency and hence low casing temperature of this boiler, cupboard or compartment ventilation is not necessary.

Leave existing air vents.

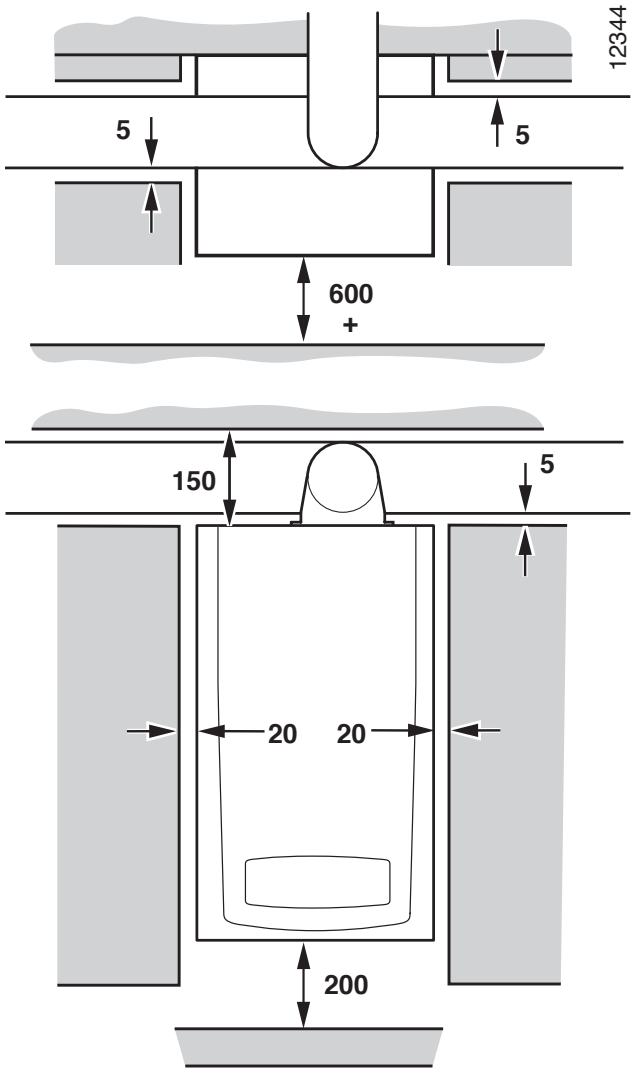

+ A removable compartment door can be placed at least 5mm in front of the appliance.

MINIMUM CLEARANCE FROM PERMANENT SURFACES

Diagram 2.1

3 Flue Location and Ventilation

3.1 Flue Options

This boiler is suitable for concentric Horizontal and Vertical flues, elevated horizontal and vertical twin, all are fitted onto the top of the boiler.

The Glow-worm Flue Options Guide, available on request or through the web site, describes in detail the necessary accessories.

These instructions describe the use of the standard and telescopic horizontal flues.

The instructions for all other flues will be contained in those packs.

3.2 Flue Length

The maximum permissable horizontal flue length is 10 metres plus the flue terminal, this can be achieved by use of the accessories, however should additional 90° or 2 x 45° elbows be used then the length MUST be reduced by 1metre.

When extension pipes are used the flue system must be designed to have a continuous fall to the boiler of at least 2.5° 44mm/metre to allow condensate to run back into the boiler and out via the drain.

The flue can be installed from inside the building, when access to the outside wall face is not practicable.

The diagrams 3.1 to 3.4 describe the lengths achievable without the use of extensions or elbows.

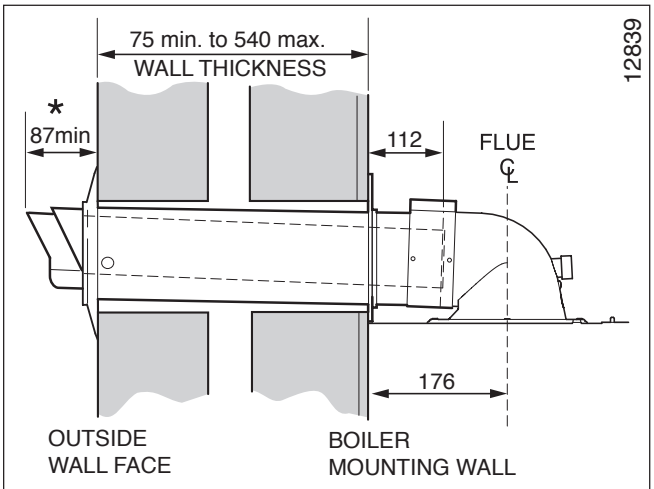

* NOTE. If necessary, it is permitted to increase this dimension to 600mm max.

TOP REAR FLUE - STANDARD Diagram 3.1

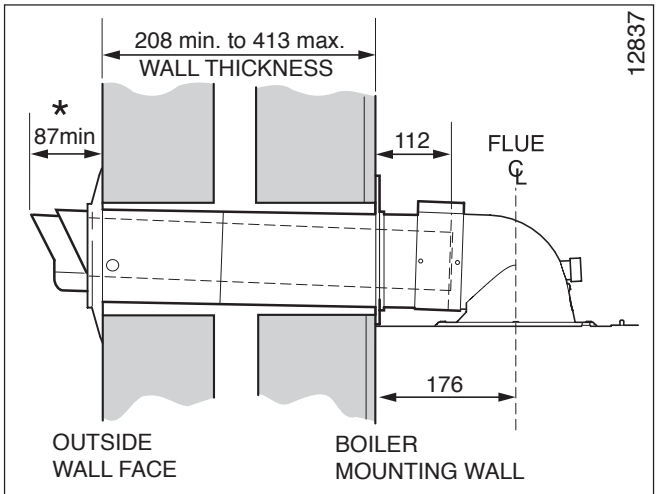

* NOTE. If necessary, it is permitted to increase this dimension to 600mm max.

TOP REAR FLUE - TELESCOPIC Diagram 3.3

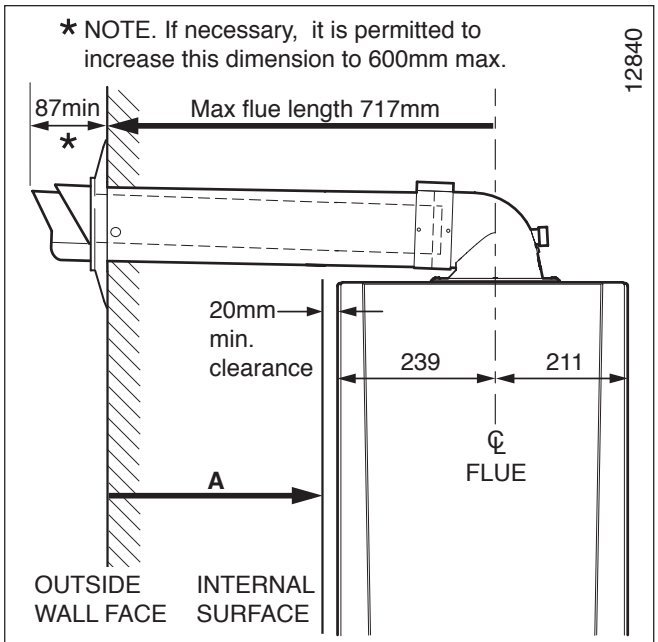

A	
Max. distance from outside wall face to min clearance. LH - 458mm RH - 486mm	**Min.** distance from outside wall face to min clearance. LH/RH - 75mm

TOP SIDE FLUE - STANDARD Diagram 3.2

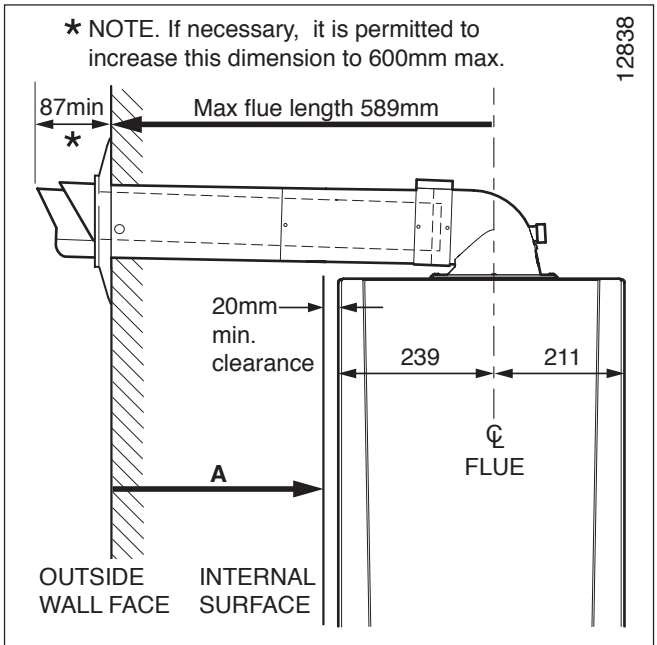

A	
Max. distance from outside wall face to min clearance. LH - 330mm RH - 358mm	**Min.** distance from outside wall face to min clearance. LH - 125mm RH - 153mm

TOP SIDE FLUE - TELESCOPIC Diagram 3.4

3 Flue Location and Ventilation

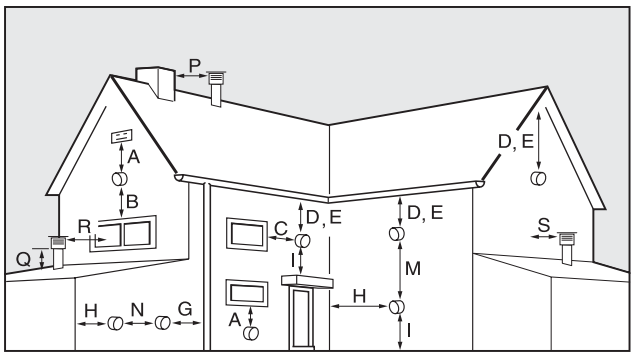

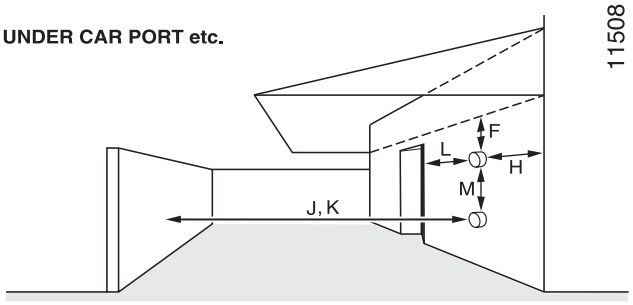

11508

MINIMUM SITING DIMENSIONS FOR FANNED FLUE TERMINALS POSITION **MM**

HORIZONTAL FLUES

A	DIRECTLY BELOW AN OPENING, AIR BRICK, OPENING WINDOWS	300
B	ABOVE AN OPENING, AIR BRICK, OPENING WINDOWS	300
C	HORIZONTALLY TO AN OPENING, AIR BRICK, OPENING WINDOWS	300
D	BELOW GUTTER, DRAIN/SOIL PIPE	25
E	BELOW EAVES	25
F	BELOW A BALCONY OR CAR PORT	25
G	FROM VERTICAL DRAIN PIPES AND SOIL PIPES	25
H	FROM INTERNAL/EXTERNAL CORNERS	25
H*	TO A BOUNDARY ALONGSIDE THE TERMINAL	300
I	ABOVE ADJACENT GROUND OR BALCONY LEVEL	300
J*	FROM SURFACE OR A BOUNDARY FACING THE TERMINAL	600
K	FACING TERMINALS	1200
L	FROM OPENING (DOOR/WINDOW) IN CAR PORT INTO DWELLING	1200
M	VERTICAL FROM A TERMINAL	1500
N	HORIZONTALLY FROM A TERMINAL	300

VERTICAL FLUES

P	FROM ANOTHER TERMINAL	600
Q	ABOVE ROOF LEVEL	300
R	FROM ADJACENT OPENING WINDOW	1000
S	FROM ADJACENT WALL TO FLUE	300

Diagram 3.5

3.4 Terminal Position

The minimum acceptable siting dimensions for the terminal from obstructions, other terminals and ventilation openings are shown in diagram 3.5. For Ireland the minimum distances for flue terminal positioning must be those detailed in I.S.813 "Domestic Gas Installations".

The terminal must be exposed to the external air, allowing free passage of air across it at all times.

Being a condensing boiler some pluming may occur from the flue outlet. This should be taken into consideration when selecting the position for the terminal.

H* and J* See diagram 3.5 . These dimensions comply with the building regulations, but they may need to be increased to avoid wall staining and nuisance from pluming depending on site conditions.

Increased siting flexibility can be achieved by using the Glow-worm Plume Management Kit, A2044000 (black) or A2044100 (white).

NOTE: If necessary it is permitted to increase the terminal protrusion through the outside wall to greater than the minimum dimension of 87mm but no more than 600mm, see diagram 1.1.

Carports or similar extensions of a roof only, or a roof and one wall, require special consideration with respect to any openings, doors, vents or windows under the roof. Care is required to protect the roof if made of plastic sheeting. If the carport comprises of a roof and two or more walls, seek advice from the local gas supply company before installing the boiler.

3.5 Terminal Guard

A terminal guard is required if persons could come into contact with the terminal or the terminal could be subject to damage.

If a terminal guard is required, it must be positioned to provide minimum of 50mm clearance from any part of the terminal and be central over the terminal.

The guard should be similar to that shown in diagram 3.6.

A suitable guard is manufactured by: -

Tower Flue Components

Morley Rd.

Tonbridge

Kent

TN9 1RA.

Size: 280mm x 280mm x 270mm.

TERMINAL GUARD

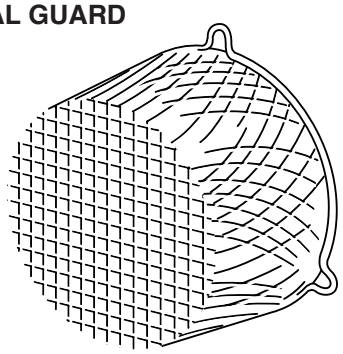

Diagram 3.6

4 Heating System

4.1 General

The boiler is for use only with sealed central heating systems.

The safety valve is an integral part of the boiler and it cannot be adjusted.

The digital readout on the controls fascia indicates the system pressure when there is no central heating demand.

The circulation pump is integral with the boiler.

4.2 Expansion Vessel

The boiler has an integral expansion vessel with a capacity of 8 litres (1.76 gallons), with a charge pressure of 0.5bar.

NOTE: The expansion vessel volume depends on the total water system volume and the initial system design pressure. Guidance on vessel sizing is also given in the current issue of BS5449 and BS7074 Part 1, for IE refer to the current edition of I.S.813 "Domestic Gas Installations".

Table 3. Flow Rate	
MODEL	MINIMUM FLOW RATE
24 cxi	774 litres/hr.
30 cxi	1032 litres/hr.
38 cxi	1289 litres/hr.
This is equal to 20°C differential at maximum heat input.	

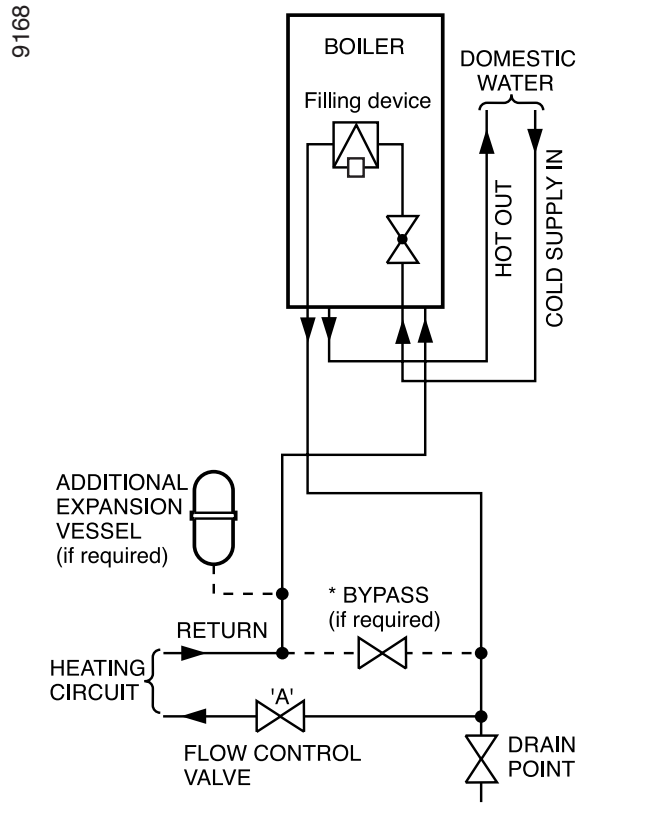

* Refer to section 11.6

Diagram 4.1

4.3 Flow Rate

If it is necessary to alter the flow rate, the system can be fitted with a lockable balancing valve in the main flow or return pipes shown as valve "A" in diagram 4.1. The flow rate through the boiler must not be allowed to fall below that given in table 3.

4.4 Bypass

The boiler is fitted with an adjustable automatic bypass. Ensure that under no circumstances does the flow rate drop below the figure specified, refer to table 3 and section 11.6.

The installation of the boiler must comply with the requirements of the current issue of BS6798, in Ireland, refer also to the current edition of I.S.813 "Domestic Gas Installations".

In GB it is necessary to comply with the Water Supply (Water Fittings) Regulations 1999 (for Scotland, the Water Byelaws 2000, Scotland).

To comply with the Water regulations your attention is drawn to: The Water Regulations guide published by the Water Regulations Advisory Service (WRAS) gives full details of the requirements.

In IE the requirements given in the current edition of I.S.813 "Domestic Gas Installations" and the current Building Regulations must be followed.

4.5 Filling the Sealed System

NOTE: The water pressure at the boiler must be at least 1.2bar to enable filling the boiler to a minimum pressure. If not pressurisation must be carried out by an alternative filling loop.

The boiler has a built in filling device, see diagram 4.2. A push-on extension is supplied in the loose items pack to ease access to the filling device tap.

This filling device is designed to enable the re-pressurisation of the system in the event of loss of pressure. It is not intended to be used to completely fill the system. If so used, it may take a long time to fill the system.

To fill the system quickly provision should be made to include a proprietry filling loop external to the boiler.

Suitable external filling systems are shown diagramatically, see diagram 4.3. The system should be pressurized to 1 bar, indicated on the digital display with no heating demand.

4.6 Water Treatment

In the case of an existing installation, it is **ESSENTIAL** that prior to installing the new boiler the system is thoroughly flushed. For optimum performance after installation of a new system, the boiler and its associated central heating system should also be flushed. Flushing should be carried out in accordance with BS7593: 1992 using a cleanser such as Sentinel X300 or X400, Fernox restorer or Salamander corrosion guard cleaner.

For long-term corrosion protection, after flushing, an inhibitor suitable for stainless steel exchangers should be used, refer to the current issue of BS 5449 and BS 7593 on the use of inhibitors in central heating systems. Examples are Sentinel X100 Fernox protector or Salamander corrosion guard inhibitor.

4.7 Draining Tap

A draining tap must be provided at the lowest points of the system, which will allow the entire system to be drained.

See addendum.

A drain tap for the appliance is provided as an integral part of the hydroblock, see diagram 12.10.

General - All domestic hot water circuits, connections, fittings must be in accordance with the relevant standards and water supply regulations.

For GB: Guidance G17 to G24 and recommendation R17 to R24 of the Water Regulations Guide.

For IE: The current edition of I.S.813 "Domestic Gas Installations".

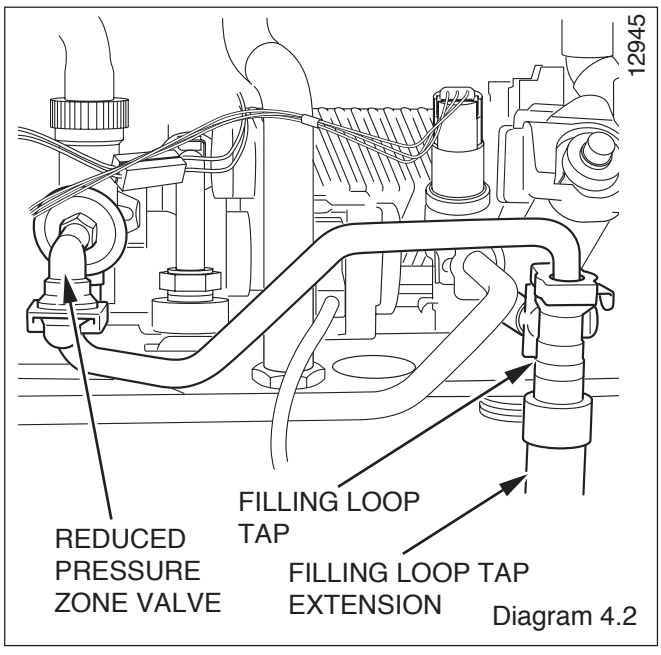

Diagram 4.2

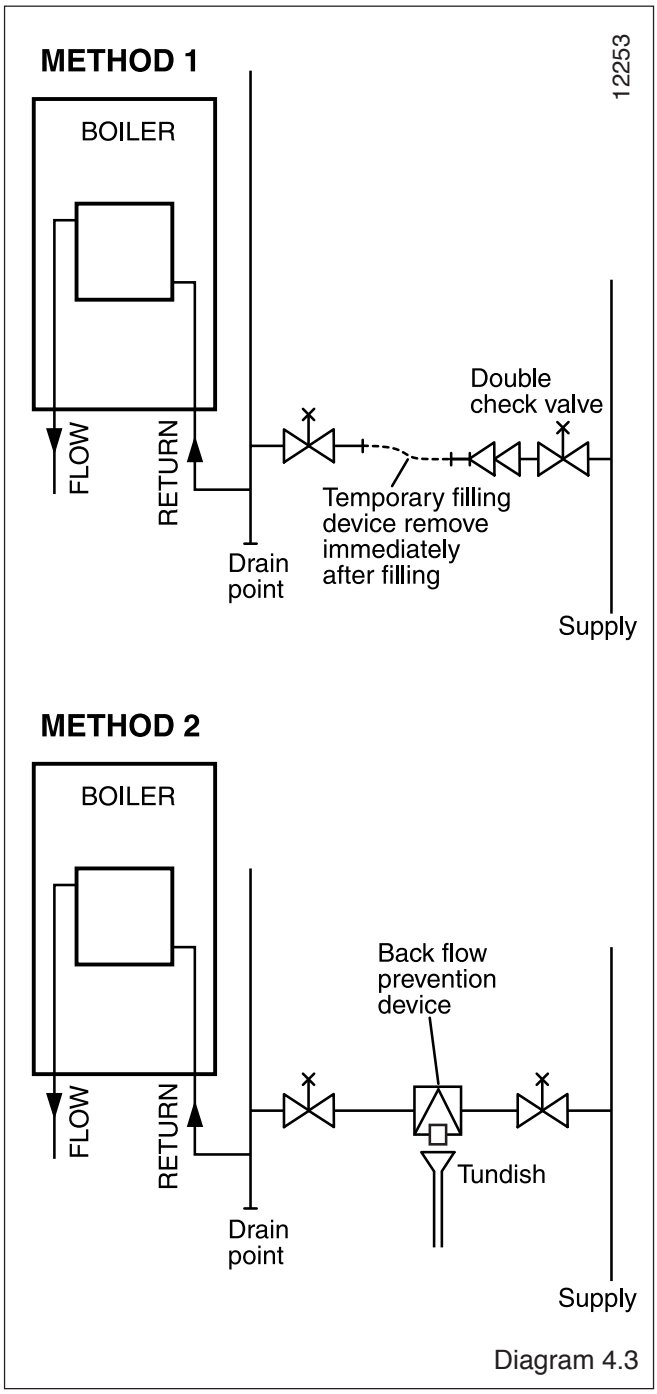

Diagram 4.3

5 Domestic Hot Water System

5.1 Water Pressure

The maximum working pressure of the domestic hot water circuit is 10 bar. If the cold water supply pressure exceeds this, then a pressure-reducing valve must be fitted in the supply to the boiler.

5.2 'Hard' Water Areas

The temperatures within the heat exchanger are limited by the boiler control system to minimise scale formation within the hot water pipework. However, in areas where the water is 'hard' (i.e. more than 200mg/litre), it is recommended that the hot water setting is reduced and that a scale reducer is fitted.

Refer to the manufacturer's instructions or consult the local water company for additional advice.

5.3 Domestic Water Flow Rate

The water flow rate is restricted to a maximum 8 l/min (24cxi) 12 l/min (30cxi) and15.5 l/min (38cxi) by a restrictor fitted during boiler installation, see diagram 7.1.

6 Installation Preparation

6.1 Appliance Pack

IMPORTANT: With regards to the Health and Safety Manual Handling requirements, two persons shall be required to lift the appliance, refer to Manual Handling section on page 5.

Please check the boiler contents as shown in diagrams 6.1 and 6.1a.

NOTE: The fittings pack, pipe pack and document pack are located in the polystyrene packing on the top of the boiler.The flexible condensate outlet pipe is located in the base polystyrene packing under the boiler base.

Remove the polystyrene end packing pieces then carefully lay the boiler on its back, remove the two front casing panel securing screws and lift off the panel from two retaining lugs.

Remove the transit packaging behind the front panel and discard.

Carefully place front panel and screws to one side.

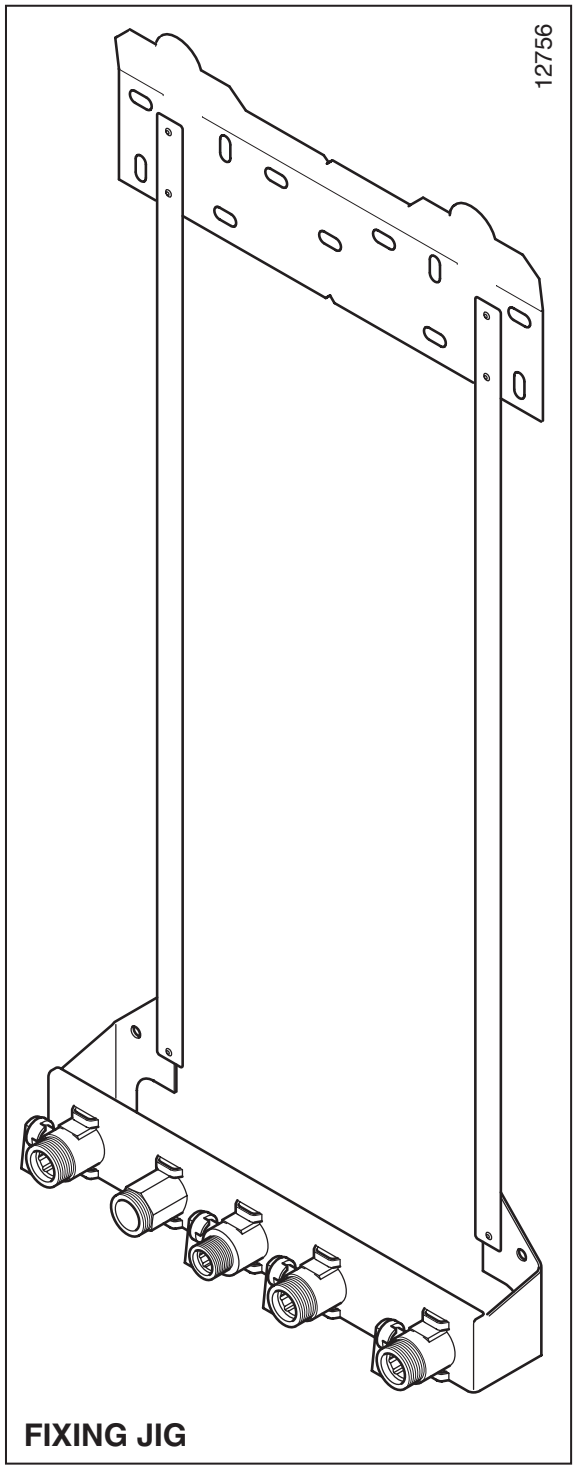

Diagram 6.1

12912

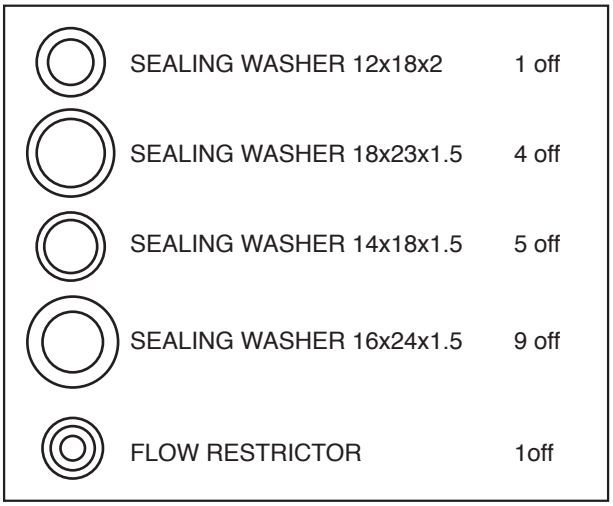

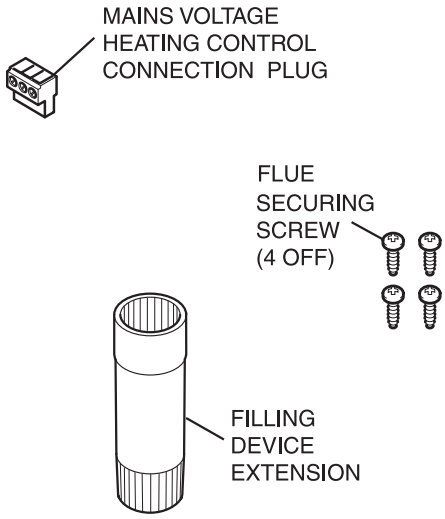

FITTINGS PACK

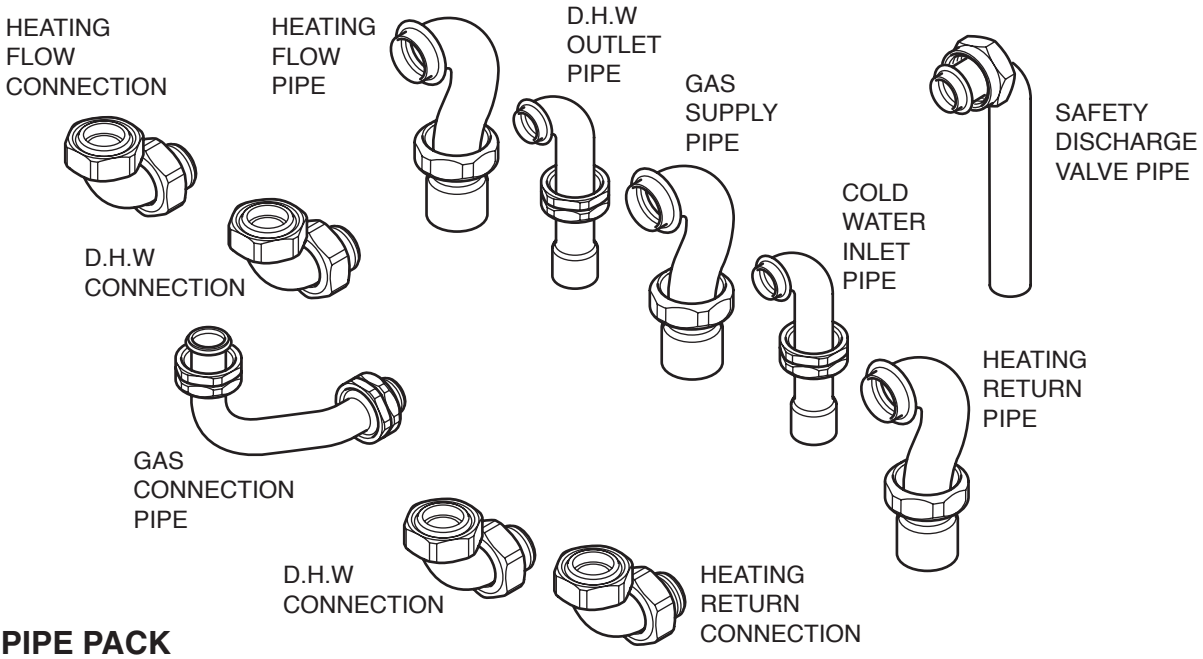

PIPE PACK

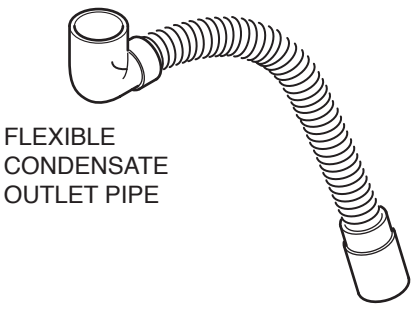

LOOSE ITEMS

DOCUMENTATION PACK
(Not illustrated)

Installation and Servicing Instructions
Service Plan Leaflet
Combi Cover Leaflet
Wall template

Diagram 6.1a

6.2 Wall Template

Take the wall template from the documentation pack and place in the desired position on a flat wall, giving due consideration to boiler clearances, see section 2, and the flue you are fitting.

6.3 Flue Hole Cutting

The **standard horizontal flue** is designed with an internal fall of 44mm/metre towards the boiler for disposal of condensate. If the standard flue length alone is being used then the flue hole of diameter 105mm can be cut in the position marked on the wall template.

For **standard side flues** the horizontal flue centre line on the wall template should be extended to the side wall, and the vertical centre of the flue hole marked at 176mm from the back wall.

For installations with external access, a 105mm diameter core drill can be used.

For installations with internal access only a 125mm diameter core drill should be used.

When using extension pipes with the horizontal rear flue, a core drill size of 125mm should be used to allow the extension pieces to slope at 44mm/metre (2.5°) towards the boiler.

For **extended side flues**, the flue hole centre should be determined by extending the dashed inclined line on the template to the side wall. This dashed line is drawn at 44mm/metre (2.5º) rise from the boiler. Where this line reaches the side wall, a horizontal line should be marked. The vertical centre line of the flue should then be marked at 176mm from the back wall, see diagram 6.2.

To allow for the flue passing through the wall at this angle a 125mm hole should be drilled irrespective of internal or external installation.

Remove the wall template whilst drilling the flue hole.

6.4 Fixing Jig

Reposition the wall template over the flue hole and mark the position of the fixing holes for the fixing jig, see diagram 6.3.

Drill the required fixing holes and insert suitable wall plugs.

NOTE: Due to the varied site conditions we do not supply fixings and advise that the installer should supply those which are suitable.

Secure the fixing jig to the wall.

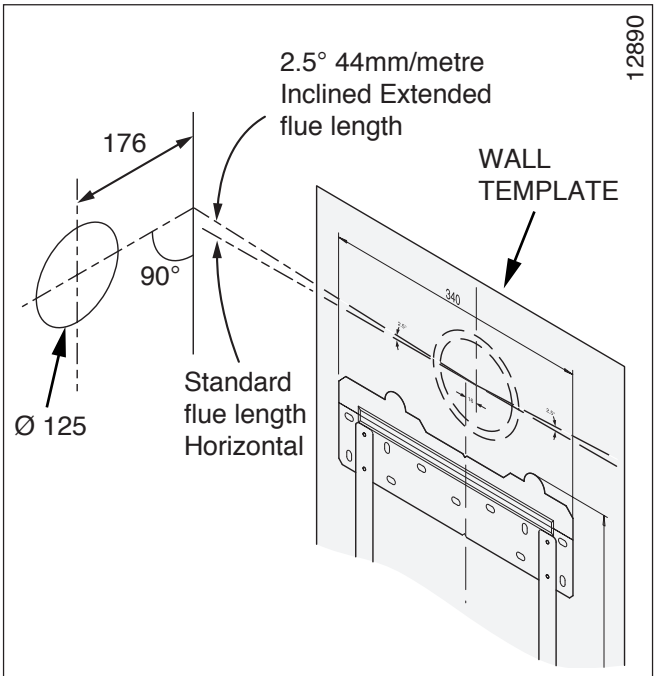

EXTENDED SIDE FLUE Diagram 6.2

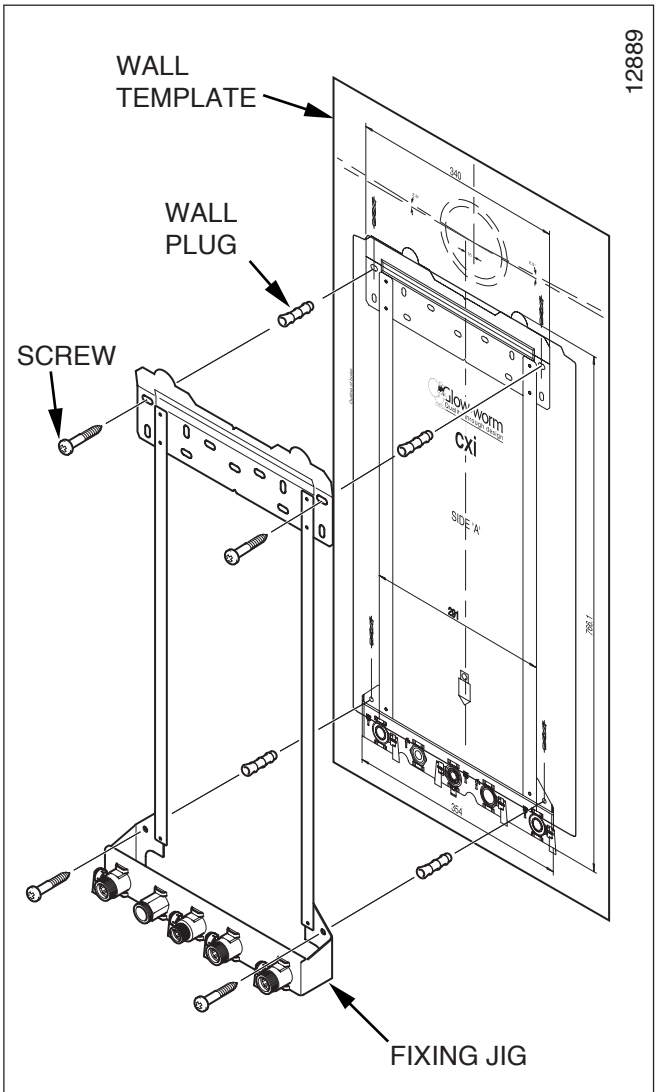

Diagram 6.3

7 Gas/Water & Appliance Connection

7.1 System Connection

The system can now be connected without the boiler being mounted. All water and gas connections are on the fixing jig with the exception of the condense drain and safety discharge, the positions of these are shown on the wall template.

The gas supply pipe must be chased into the wall if routed up the back of the boiler.

A Vertical Plumbing Kit can be used to route the central heating or DHW pipes, see section 1.6.

Make connections to fixing jig, gas, water and heating cocks with the tube assemblies supplied in fixing pack as shown in diagram 7.1.

7.2 Gas Connection

Before connection check supply of local gas.

Refer also to section 1.2.

Do not subject the gas service cock to heat.

Fit the sealing washer into the union nut and make good the connection to the gas service cock on the wall fixing jig, see diagram 7.1.

Make sure the on / off lever is accessible.

The whole of the gas installation, including the meter, should be inspected, tested for soundness and purged in accordance with the current issue of BS6891 and in IE the current edition of I.S.813 "Domestic Gas Installations".

7.3 Water Connections

Flush out the domestic hot water and the heating systems before connecting to the boiler.

Make the connections to the domestic hot water and heating systems by fitting the sealing washers into the securing nuts and make good the connection to the isolating valves on the fixing jig, see diagram 7.1.

Do not subject the isolation valves to heat.

Make sure the drain point is accessible, refer diagram 12.10.

7.4 Appliance Connection

IMPORTANT: With regards to the Manual Handling Operations, 1992 Regulations, the following lift operation exceeds the recommended weight for a one man lift, refer to Manual Handling section, on page 5.

The appliance will contain a small amount of water, place a water container beneath the boiler connections before removing the protective caps.

Position gasket/sealing washers and cold water inlet flow restrictor supplied in the fittings pack, as shown in diagram 7.1.

Lifting the boiler into position, lean the top of the boiler slightly to the wall and position just above the hanging bracket. Lower the boiler slowly and engage onto the hanging bracket.

Position gasket/sealing washers and cold water inlet flow restrictor supplied in the fittings pack, as shown in diagram 7.1.

Make good the final connections.

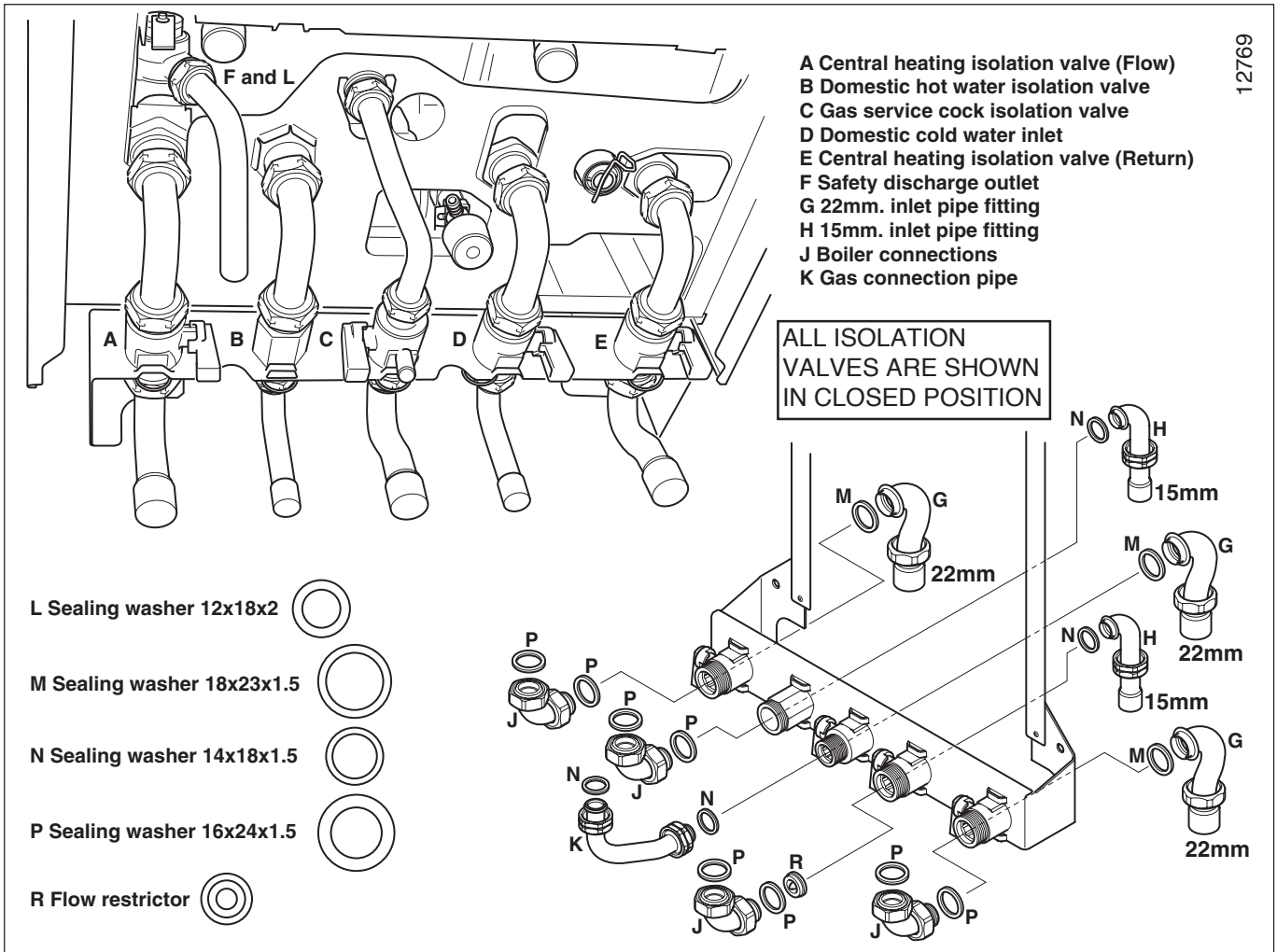

NOTE: One additional washer for each size M,N and P, is supplied as a spare. Diagram 7.1

8 Safety Discharge Valve and Condensate Connections

8.1 Safety Discharge Valve

The pipe from the safety discharge valve must not discharge above an entrance, window or any type of public access area.

Take the short safety discharge tube, union nut and seal, supplied loose in the boiler fittings pack and fit as shown in diagram 8.1

This must be extended, using not less than 15mm o.d. pipe, to discharge, in a visible position, outside the building, facing downwards, preferably over a drain.

The pipe must have a continuous fall and be routed to a position so that any discharge of water, possibly boiling, or steam cannot create any danger to persons, damage to property or external electrical components and wiring.

To ease future servicing it is advisable to use a compression type fitting to extend the safety discharge valve tube.

8.2 Condensate Drain Connection

The condensate drain connection is behind the pump at the rear of the boiler, see diagram 8.2. A flexible condensate outlet pipe is supplied loose in the base polystyrene packaging and should be used to fit on to the drain connection, if required, to discharge condensate to a drain. The drain pipe should have a fall of a least 2.5° away from the boiler.

Condensate should, if possible be discharged into the household internal drainage system. If this is not practicable, discharge can be allowed into the external household drains or a purpose designed soak away, refer to diagram 8.3.

It is recommended that any external condensate drain pipe is insulated and also preferably of 32mm diameter, to prevent freezing in adverse weather conditions.

The condensate is discharged periodically in 'slugs' by siphonic action.

It is not necessary to provide air breaks or extra traps in the discharge pipe as there is already a 75mm high trap inside the boiler. Fitting an extra trap may cause the boiler siphon to work incorrectly.

Refer to BS5546 or BS6798 for advice on disposal of boiler condensate.

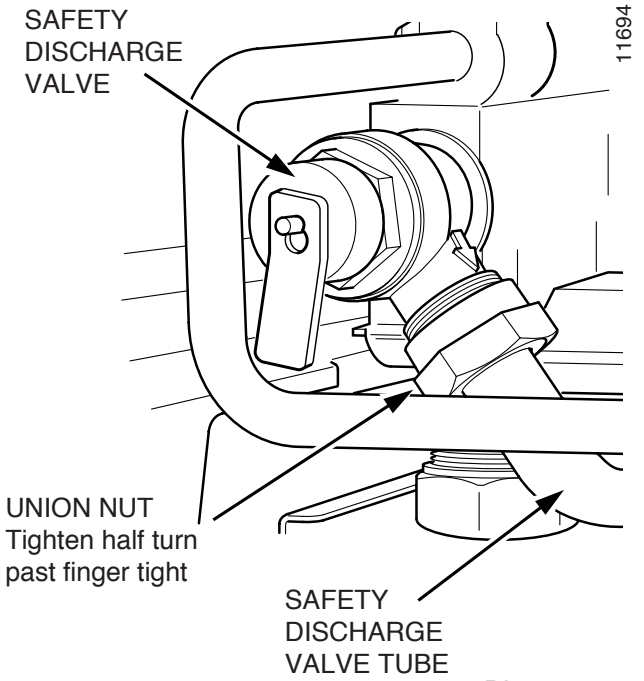

Diagram 8.1

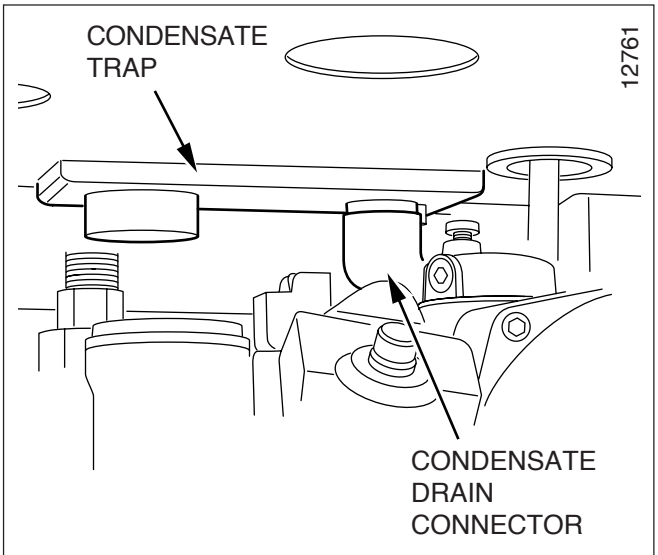

Diagram 8.2

Typical Gravity Draining Condensate Installations

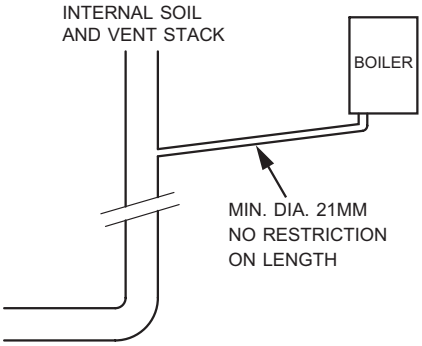

Internal Soil and Vent Pipe

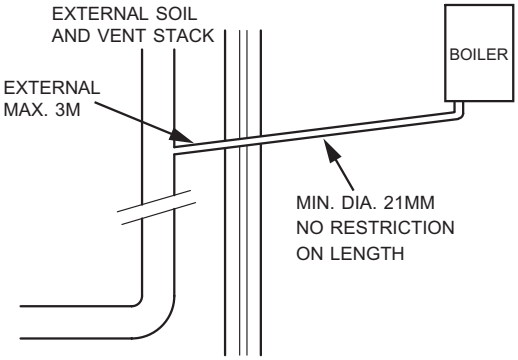

12333

External Soil and Vent Pipe or Rainwater Pipe

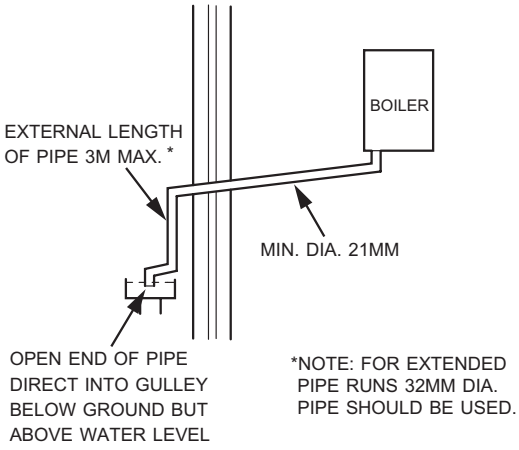

External Termination to a Gulley or Hopper

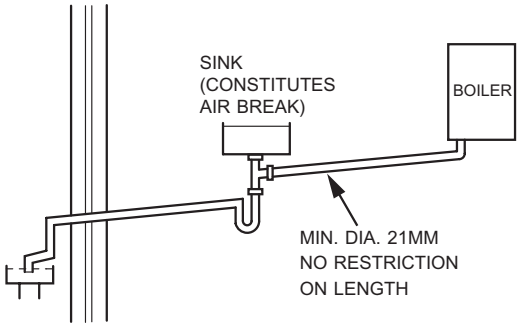

Internal Termination into Combined Sink Waste

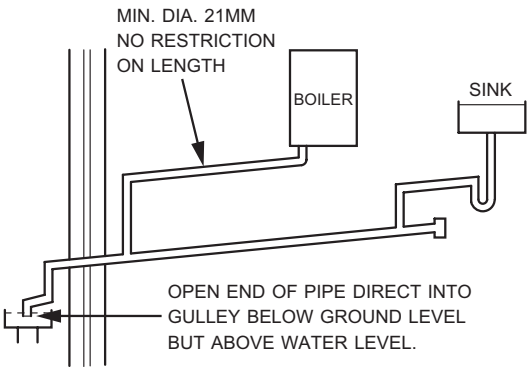

Internal Termination Downstream of Sink Waste

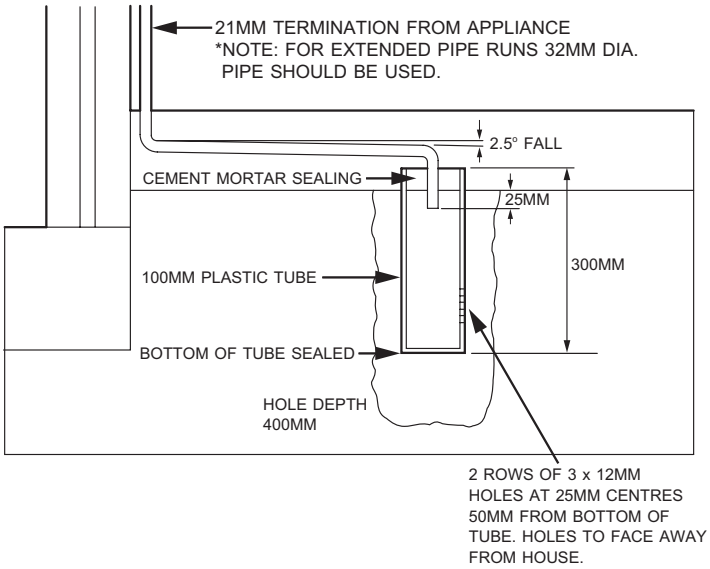

External Termination into Soakaway

NOTE: PIPEWORK SHOULD ALWAYS FALL AWAY FROM BOILER BY AT LEAST 2.5° 44mm FOR EVERY 1M.

Diagram 8.3

9 Flue Preparation Telescopic and Standard Flue

9.1 Flue Components

The components supplied in the Standard and Telescopic kit are shown in diagram 9.1.

Additional flue accessories are available to suit your site conditions, see diagram 9.2.

The Glow-worm Flue Options Guide, available on request or through the web site, describes in detail the necessary accessories.

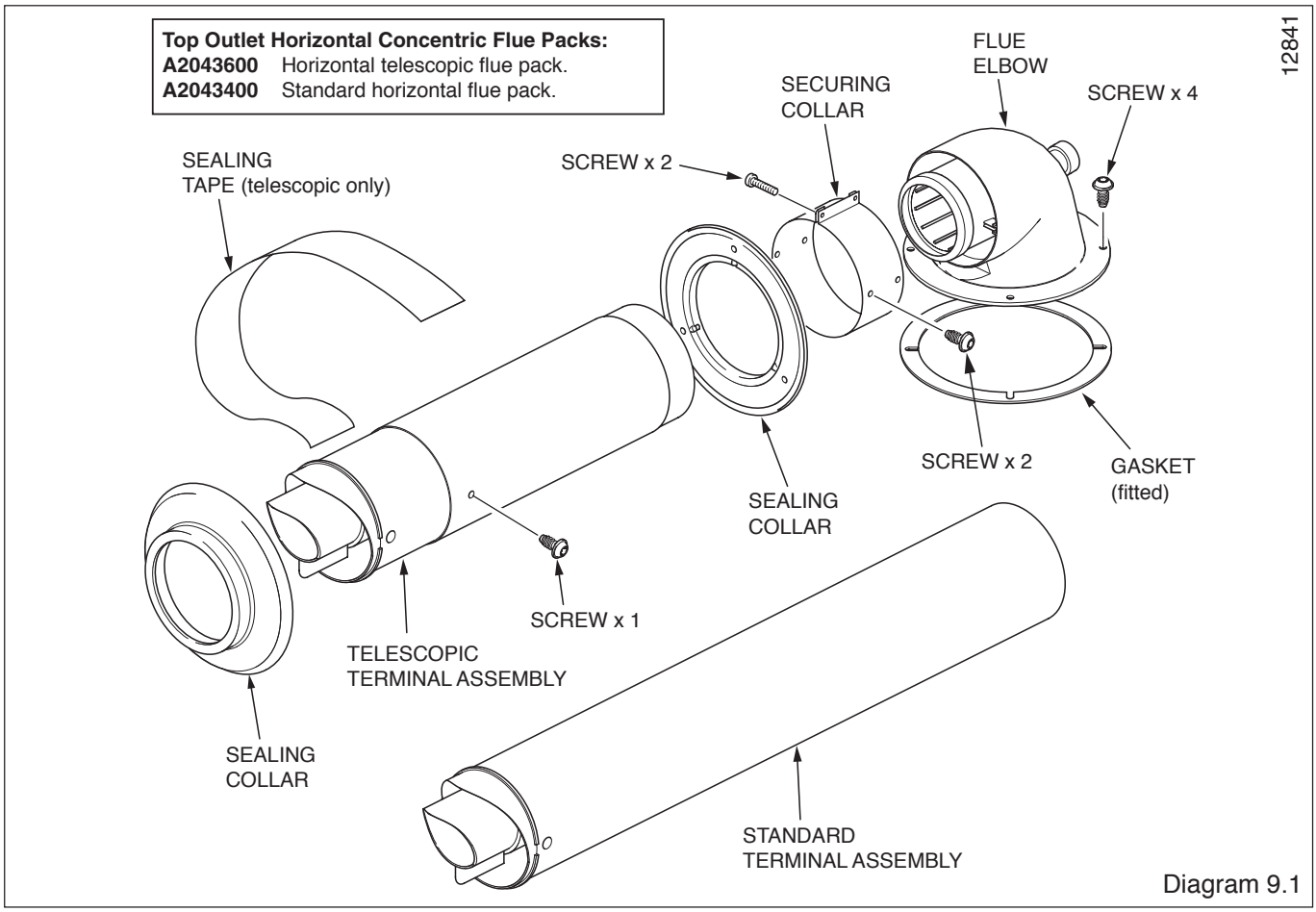

Diagram 9.1

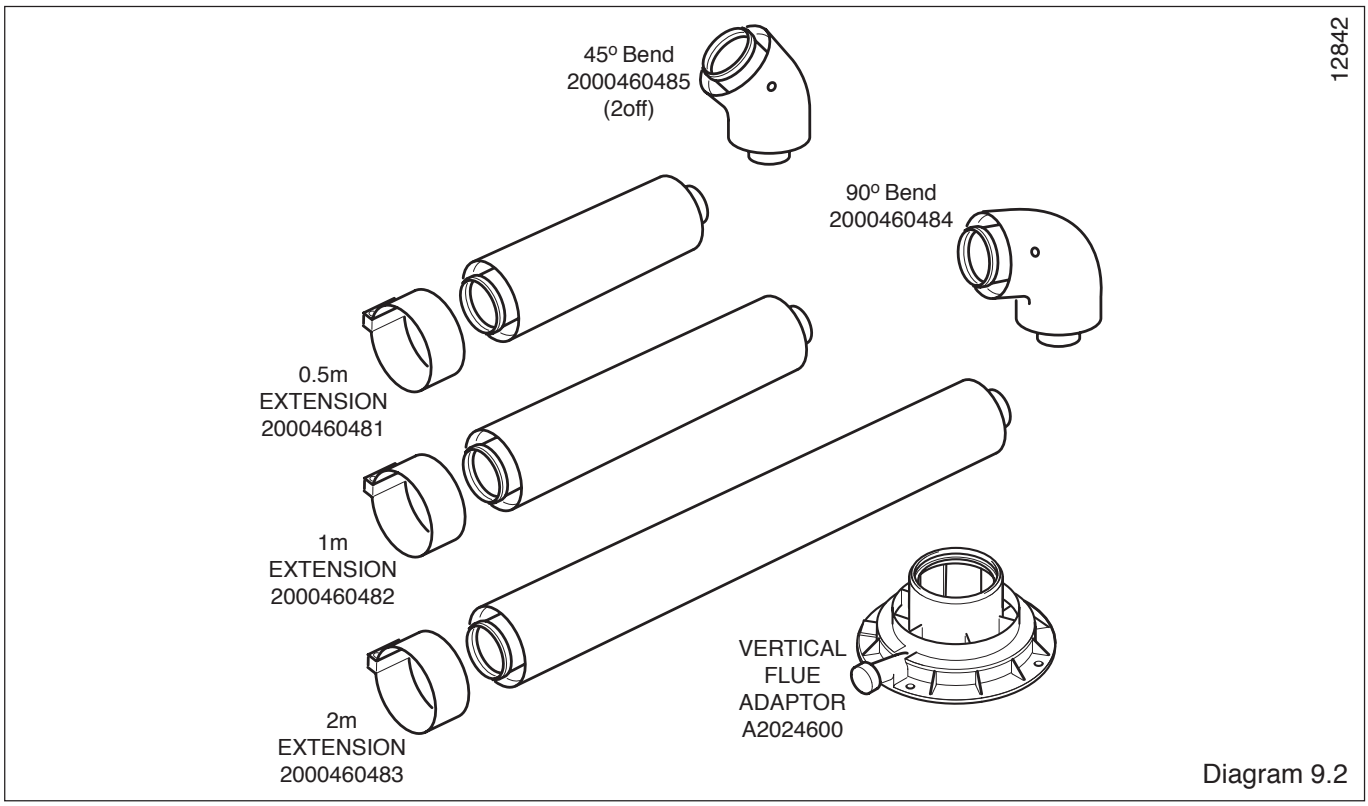

Diagram 9.2

9.2 Flue Length

Top Rear flue - **Standard -** with the flue elbow temporarily fitted, measure the distance from the outside wall to the butt joint, see diagram 9.3. If the measurement 'Y' exceeds 652mm, then the appropriate length of extension pipe is required. The minimum dimension is 187mm to suit a 75mm min wall thickness.

Top Rear flue - **Telescopic -** with the flue elbow temporarily fitted, measure the distance from the outside wall to the butt joint, see diagram 9.4. If the measurement 'Y' exceeds 525mm, then the appropriate length of extension pipe is required, if the dimension is less than 320mm DO NOT cut the flue, it can project to a maximum of 600mm, if this is not desirable then a Standard flue MUST be used and cut to length.

Top Side flue - **Standard -** with the flue elbow temporarily fitted, measure the distance from the outside wall to the butt joint, see diagram 9.5. If the measurement 'Y' exceeds 652mm, then the appropriate length of extension pipe is required. The minimum dimension for Lhd is 270 and Rhd 242 to suit a minimum wall thickness of 75mm.

Top Side flue - **Telescopic -** with the flue elbow temporarily fitted, measure the distance from the outside wall to the butt joint, see diagram 9.6. If the measurement 'Y' exceeds 525mm, then the appropriate length of extension pipe is required, if the dimension is less than 320mm DO NOT cut the flue, it can project to a maximum of 600mm, if this is not desirable then a Standard flue MUST be used and cut to length.

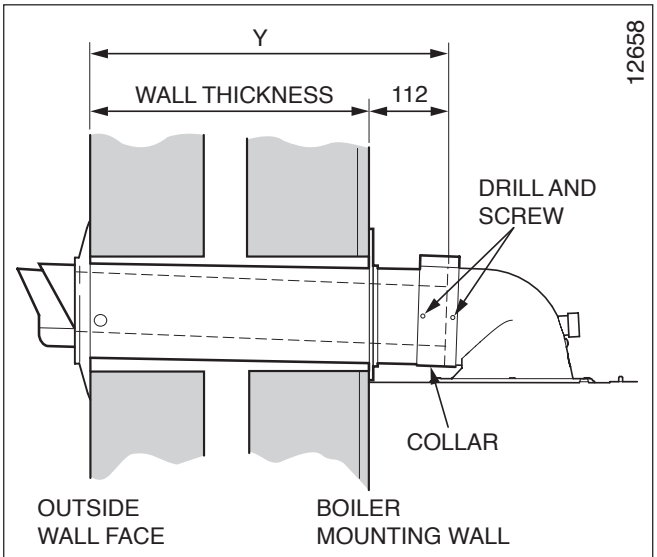

TOP REAR FLUE - STANDARD Diagram 9.3

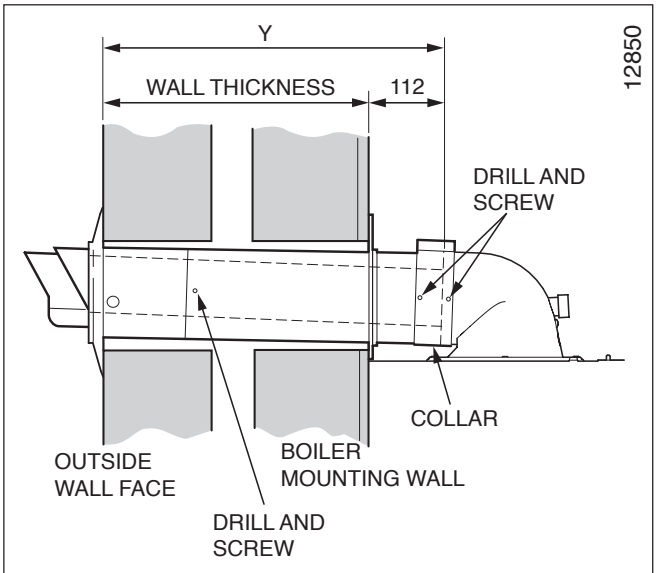

TOP REAR FLUE - TELESCOPIC Diagram 9.4

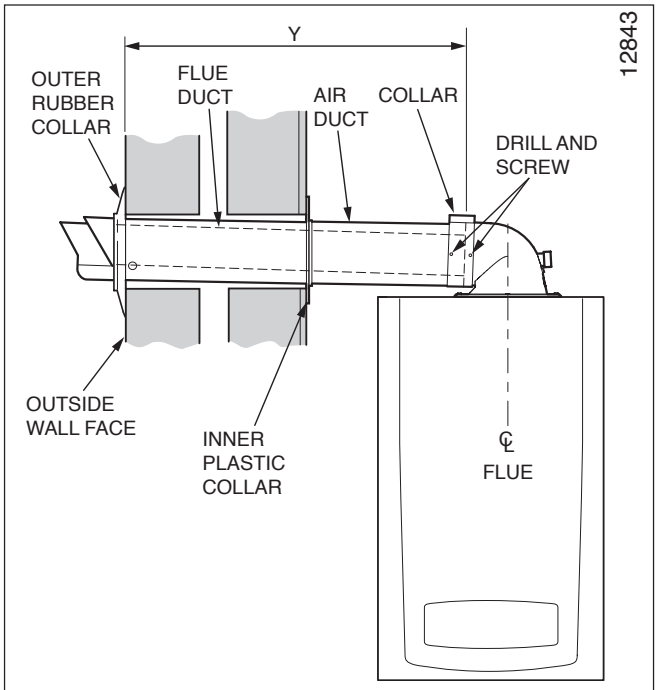

TOP SIDE FLUE - STANDARD Diagram 9.5

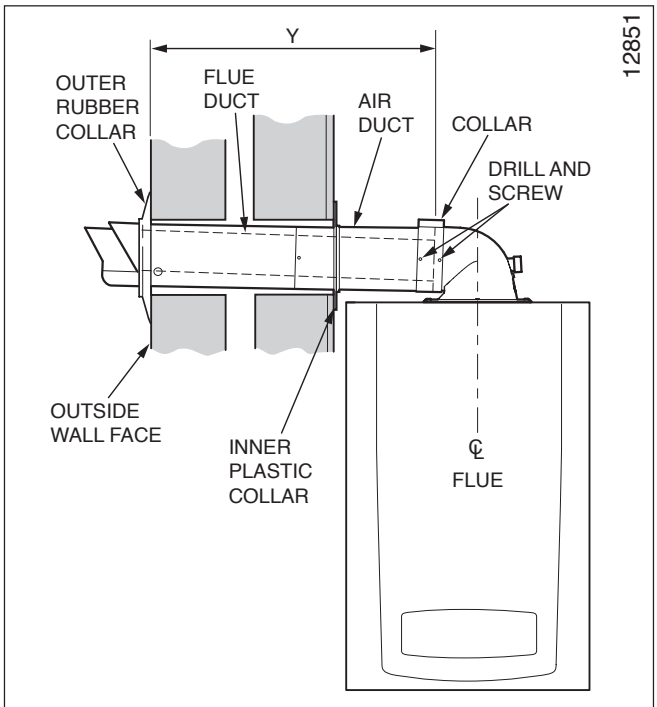

TOP SIDE FLUE - TELESCOPIC Diagram 9.6

9.2 (cont'd) Flue and Air Ducts

Telescopic:

The Telescopic Flue system MUST NOT be cut.

Adjust the flue to your required length "Y", mark the securing hole position in the air duct. Drill a 3mm diameter hole at this position, take care not to pierce the inner flue duct. Secure with screw provided and tape the joint, see diagram 9.7.

Standard:

Separate the flue duct from the terminal by twisting to release the terminal catch, then pull out of the retaining seal, refer to diagram 9.8.

The duct cutting lengths are shown in diagram 9.8.

The air duct should be cut at the opposite end to the terminal fixing.

The terminal plastic duct MUST be cut at the opposite end to the catch.

The plastic flue duct extensions MUST be cut at the opposite end to seal.

The cut ducts must be de-burred and all filings and debris removed.

NOTE: If you require to lubricate the seals to ease installation, please do not use a mineral oil based grease, we would recommend the use of water.

9.3 Flue Assembly

The flue assembly is a push fit design with securing collars.

Having adjusted the telescopic or cut the air and flue ducts as described in section 9.2

Assemble the flue elbow to the air duct, ensuring the correct alignment of the terminal. Fit the collar into position, mark through two of the pre drilled holes in the collar. Remove collar and drill two 3mm diameter holes in the elbow, take care not to pierce the inner flue duct.

Insert the terminal flue duct, remembering to engage the catch within the terminal, check for alignment.

Fit the rubber sealing collar behind the locating lugs on the flue terminal, see diagram 9.1.

Push the flue assembly into the wall, externally or internally, initially until the end of the assembly protrudes a short way from the inside face of the wall. This will enable the internal trim ring(if required) to be positioned and allow the flue duct to be drawn back into the flue elbow after the boiler has been mounted.

9.4 Flue Attachment To Boiler

Secure the flue elbow in position on top of the boiler with four torque headed screws supplied.

Draw the flue assembly from wall and engage the flue duct into the elbow and butt fit the air duct, then fit the collar and secure with screws provided, see diagram 9.9.

NOTE: If the air and flue ducts have been correctly cut to the instructions given in section 9.2, the rubber sealing collar should fit flush with the outside wall, check this.

Slide the internal trim ring back against the wall, securing in place with a small amount of sealant if required.

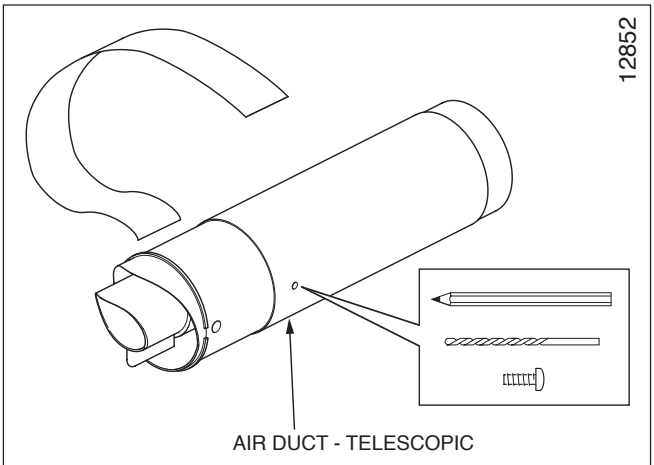

TOP TELESCOPIC AIR DUCT SECURING Diagram 9.7

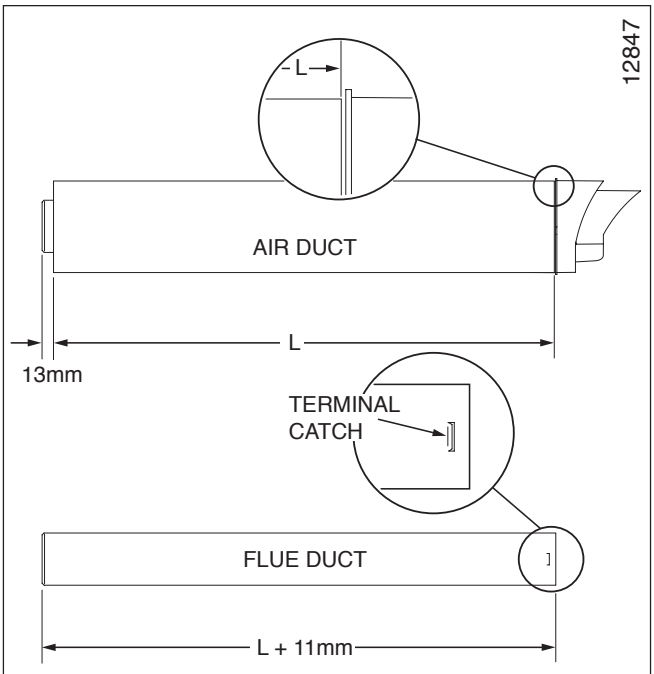

DUCT CUTTING LENGTHS Diagram 9.8

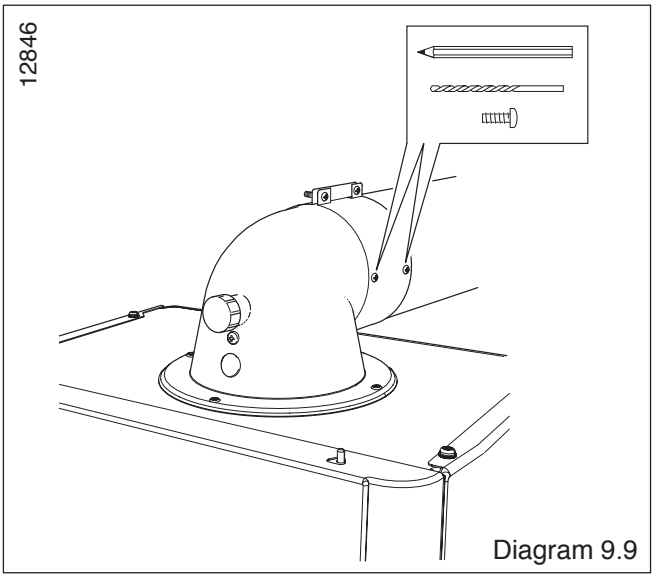

Diagram 9.9

10 Electrical Connection

WARNING: This appliance must be earthed.

This appliance must be wired in accordance with these instructions. Any fault arising from incorrect wiring cannot be put right under the terms of the Glow-worm guarantee.

All system components must be of an approved type.

Electrical components have been tested to meet the equivalent requirements of the BEAB.

Do not interrupt the mains supply with a time switch or programmer.

Connection of the whole electrical system and any heating system controls to the electrical supply must be through a common isolator.

Isolation should preferably be by a double pole switched fused spur box having a minimum contact separation of 3mm on each pole. The fused spur box should be readily accessible and preferably adjacent to the boiler. It should be identified as to its use.

A fused three pin plug and shuttered socket outlet may be used instead of a fused spur box provided that:

a) They are not used in a room containing a fixed bath or shower.

b) Both the plug and socket comply with the current issue of BS1363.

10.1 Mains Cable

Important: If a replacement supply cable is required it must be purchased. Part No. S1008600.

10.2 Voltage Free System Controls

WARNING: UNDER NO CIRCUMSTANCES MUST ANY MAINS VOLTAGE BE APPLIED TO ANY OF THE TERMINALS ON THE VOLTAGE FREE HEATING CONTROLS CONNECTION PLUG.

This boiler will operate continuously on heating as supplied, if the wire link (E), fitted between the two terminals of the heating controls connection, is left in place, see diagram 10.1.

System heating controls e.g. Room thermostat, should be fitted in accordance with the rules in force.

Refer to diagram 10.2.

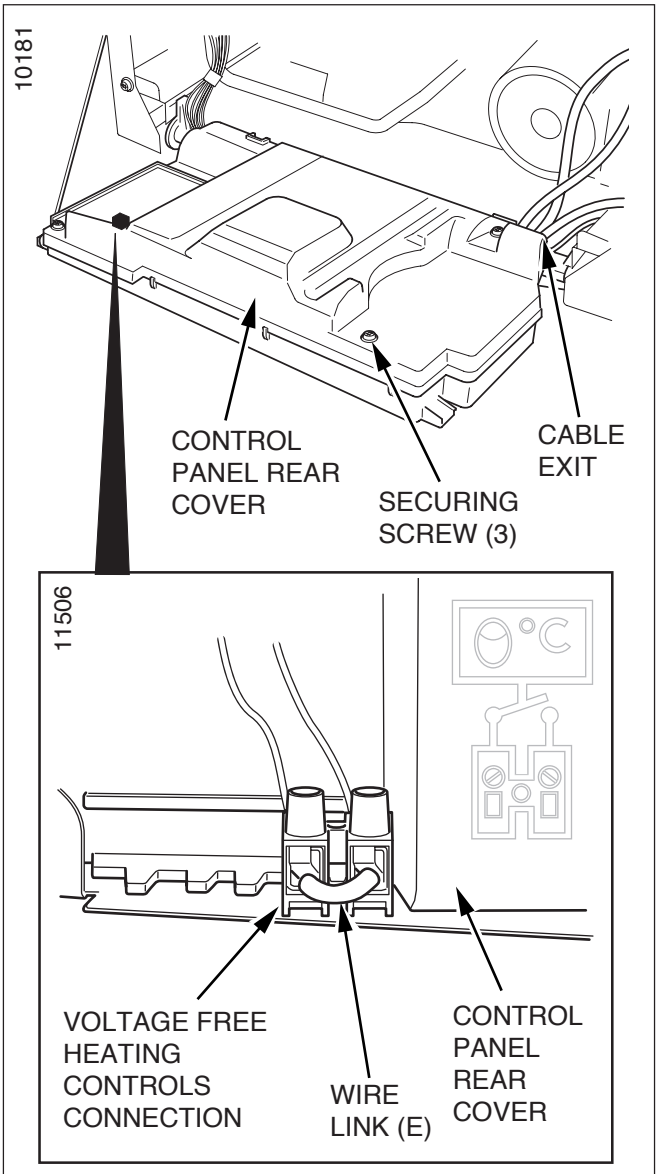

Diagram 10.1

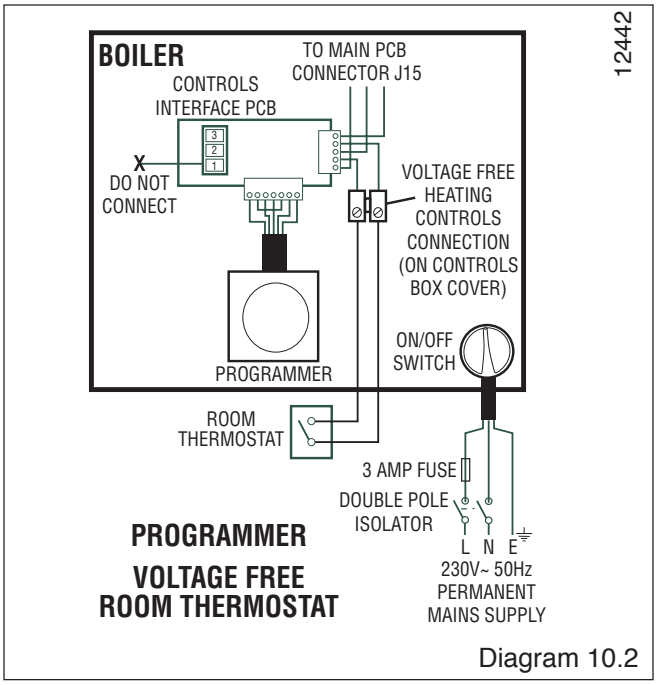

Diagram 10.2

10.3 Mains Voltage System Controls

WARNING: UNDER NO CIRCUMSTANCES MUST ANY MAINS VOLTAGE BE APPLIED TO ANY OF THE TERMINALS ON THE VOLTAGE FREE HEATING CONTROLS CONNECTION PLUG.

Remove the MAINS VOLTAGE HEATING CONTROLS CONNECTION PLUG from the fittings pack and install on the control interface PCB as follows.

Gain access to the control and user interface PCB's by unclipping the fascia panel and hinging forward, see diagram 10.3.

Route the system controls cable and connect to the plug, see diagram 10.3.

Insert plug onto controls interface PCB, see diagram 10.3.

Close the fascia panel and remove the screws to open the rear cover of control panel, see diagram 10.1.

Secure the system control cable in the strain relief, and thread the cable through rear of the control panel and out of the cables exit, see diagram 10.4.

Close and secure rear cover of control panel.

Remove the wire link from the voltage free heating controls connector, see diagram 10.1.

Connect system controls as diagram 10.5.

External controls should be fitted in accordance with the rules in force.

10.4 Electrical Connections - Testing

Carry out preliminary electrical system checks as below:

1. Test insulation resistance to earth of mains cables.
2. Test the earth continuity and short circuit of cables.
3. Test the polarity of the mains.

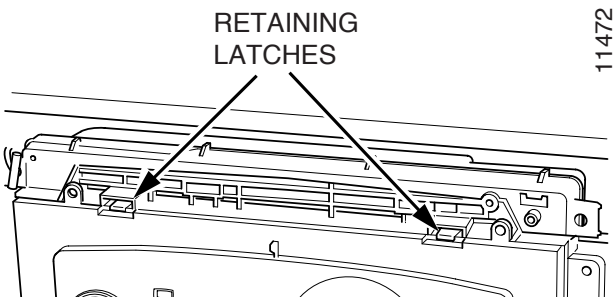

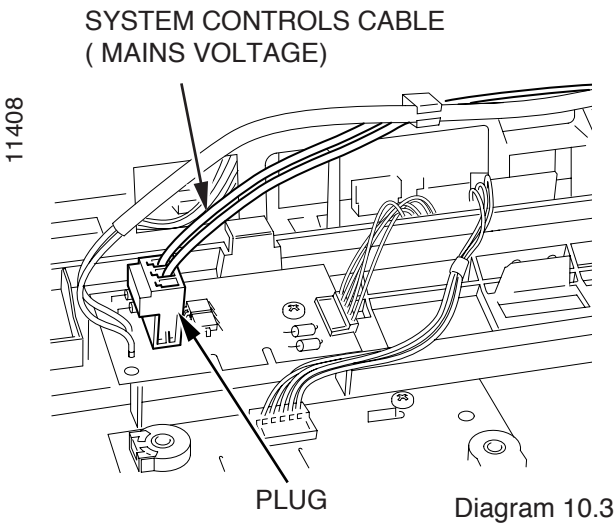

Diagram 10.3

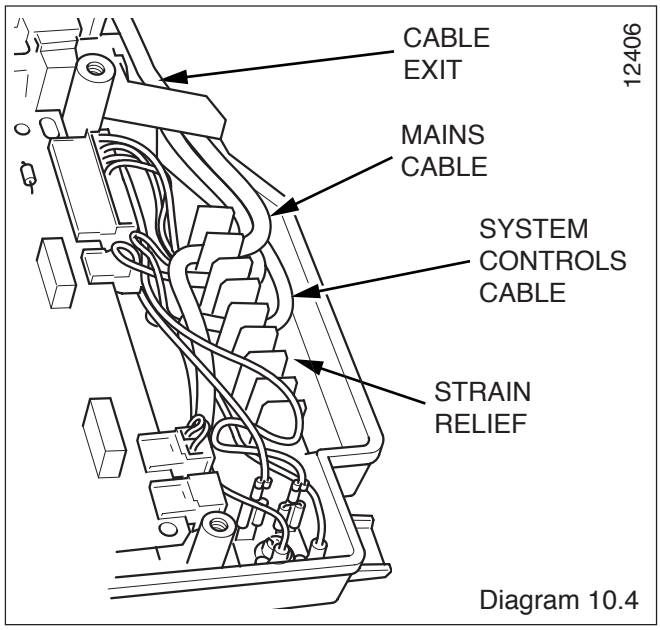

Diagram 10.4

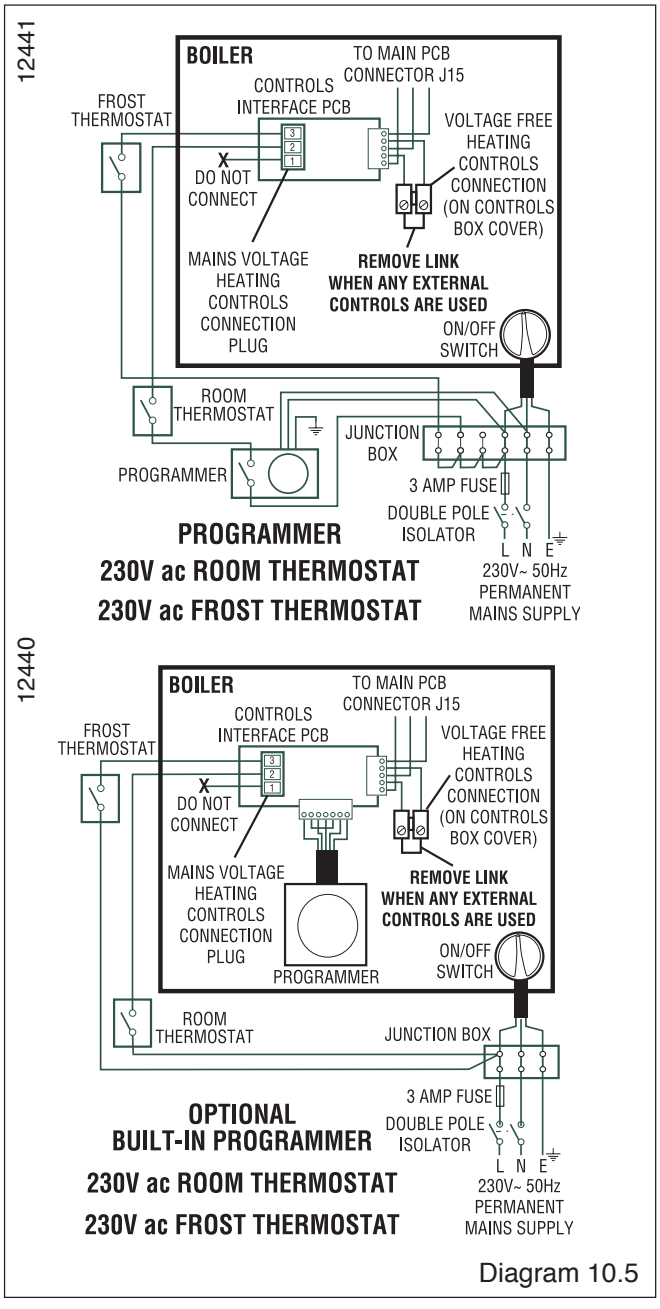

Diagram 10.5

11 Commissioning

Please ensure the "Benchmark" logbook is completed and left with the user and the magnetic lighting instruction label is placed on the surface of the boiler casing.

LPG CONVERSION - 30cxi only

NOTE: Steps 11.1 to 11.3 will need to be completed before the appliance can be converted.

The 30cxi can be converted to run on LPG-Propane (G31).

This conversion should only be carried out by a **competent person**.

During the conversion to Propane use of a suitable flue gas analyser is necessary.

As an option a chargeable boiler only commissioning service can be provided by Glow-worm Service by calling telephone No. 01773 828100.

Tools required to make the conversion are a 2mm Allen key and an electricians screwdriver.

Ensure that the appliance supply pressure = 37mbar.

(1) Access the gas valve.

(2) Refer to diagram 11.4 and turn the gas valve throttle fully clockwise.

(3) Turn the throttle back anti-clockwise by 5 ½ turns.

(4) Ensure that the gas analyser is set to the correct fuel setting - Propane.

(5) Attach combustion analyser to the combustion test point. See diagram 12.1.

(6) Unclip the controls fascia to reveal the service potentiometer on the rear of the user interface. See diagram 12.7.

(7) Turn on the mains electrical supply and turn on the gas service cock. Switch the boiler on.

(8) Ensure external controls are calling for heat. The boiler should fire automatically.

(9) Using an electrical screwdriver, rotate the service potentiometer to the mid point or 3 o'clock position. See diagram 12.7. The fan speed should now reduce to minimum and '12' should be shown flashing on the digital display. Check the CO_2 value. If necessary refer to diagram 11.4 and using a 2mm allen key carefully adjust the offset screw until a CO_2 reading of 10.5% ± 0.2% is achieved. Turning the offset screw clockwise increases the CO_2 reading.

(10) After setting combustion, rotate the service potentiometer fully anti-clockwise so that the display indicates the water temperature. Check that the CO_2 combustion remains between 9.8% and 10.8% CO_2. Further adjustment should not be necessary, however if required, carefully adjust the gas valve throttle (see diagram 11.4) until this is achieved.

(11) Remove analyser probe from the test point and replace the cap. Refit the control panel.

(12) Fit the LPG conversion label supplied in the documentation pack to the inner front panel alongside the data label. Refit the inner door and outer door.

11.1 Filling Domestic Water Circuit

Fully open any valves in the domestic water supply to the boiler.

Open the domestic water isolation valve, slot in line with the length of the valve, see diagram 7.1.

Open all hot water taps in turn and close them when water flows. Check for water soundness of the complete domestic water system.

The water flow rate is restricted to a maximum 10 l/min (24cxi) 12 l/min (30cxi) and15.5 l/min (38cxi) by a restrictor fitted during boiler installation, see diagram 7.1.

11.2 Filling the Heating Circuit

Refer to section 4 to fill the system.

Open the two central heating isolating valves and domestic cold water inlet valve, slots in line with the length of the valve, see diagram 7.1

To enable the system pressure to be viewed, turn the Central heating temperature knob and hot water temperature knob to the off position.

Turn the mains electricity supply on to the appliance and ensure that the mains switch on the appliance fascia is set to the on position.

The system pressure is displayed on the controls panel fascia of the appliance, see diagram 1 of the User Instructions.

Fill the system until the pressure on the display reads at least 1.0bar. Note that on filling the system a small amount of water may be discharged from the reduced pressure zone valve, see diagram 4.2.

Remove the two inner casing panel securing screws, lift the panel off the retaining lugs, refer diagram 11.1.

Make sure that the automatic air vent works correctly and that the black cap is loosely fitted to allow air to escape, see diagram 11.2.

Check the heating system and boiler connections for water soundness.

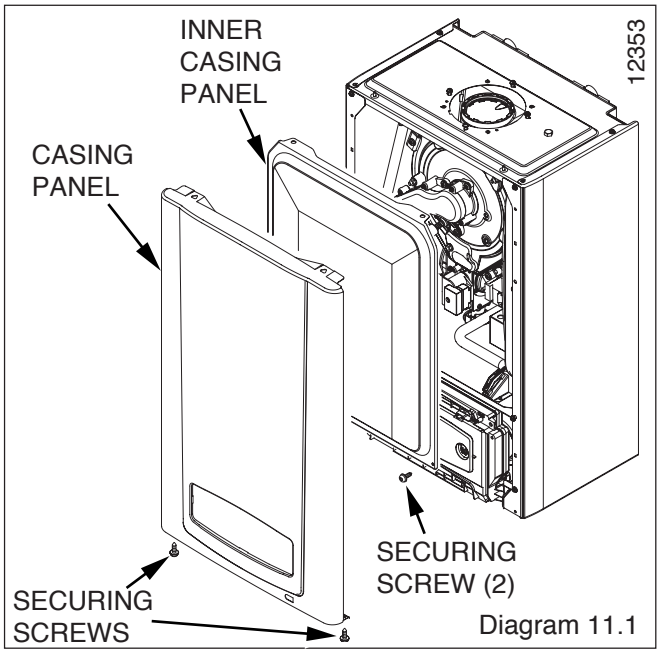

Diagram 11.1

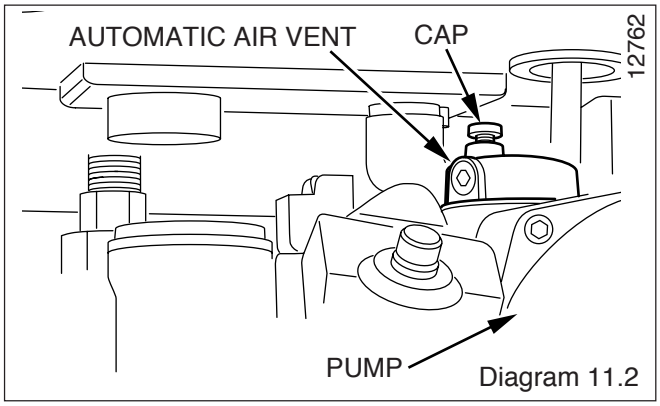

Diagram 11.2

11.3 Preparation for Lighting

Isolate the boiler from the mains electrical supply.

Test for gas soundness and purge air from the gas supply. Turn on the gas service cock, see diagram 7.1.

11.4 Initial Lighting

The lighting procedure of the boiler is fully automated.

Check that all external controls are calling for heat. If the integral programmer is fitted check that it is correctly programmed and if necessary overridden to provide heat.

Ensure that both the central heating water temperature and the hot water temperature control knobs are turned OFF (0).

Turn on the mains electrical supply and the mains reset knob to (I) on the controls fascia.

Turn the central heating water temperature control knob to (I) **MINIMUM**.

The digital display will show water temperature in central heating demand.

The fan should start and after a few seconds the ignition will commence

If the burner fails to light the fan will stop. Initially this may be due to air in the gas supply line. The boiler will automatically have three attempts at ignition.

If necessary turn the reset switch to the off position (0), then back to the on position (I) and the boiler will restart.

After the boiler has lit, allow to warm at **MINIMUM** temperature setting to purge any air from the system.

NOTE: If the appliance is operated above **MINIMUM** on initial lighting, there is a possibility that the overheat thermostat will trip and "F5" will be displayed on controls fascia, this is due to air not having been completly purged. See diagram 11.3 for reset switch.

Once the system has been purged of air turn the Hot water temperature control knob to the desired position and open a hot water tap. The diverter valve motor will move to hot water supply and the display will read system pressure. Check that hot water is available and then close the hot water tap.

Turn the Central heating water temperature control knob to the desired temperature.

The appliance will then continue to fire in central heating until the user controls are satisfied or there is another demand made for hot water.

NOTE: After first power up the firing sequence for central heating changes. After one minute stabilisation time the boiler will ramp slowly to full rate rather than going immediately to full rate. This is an adaptive feature to cope with small system requirements.

11.5 Testing - Natural Gas ONLY

Should any doubt exist about the gas rate, check it using the gas meter test dial and stop watch at least 10 minutes after the burner has lit, making sure that all other gas burning appliances and pilot lights are off.

The approximate gas rates: **24cxi** : 2.24m³/h (79ft³/h)

30cxi : 2.8m³/h (99ft³/h)

38cxi : 3.6m³/h (127ft³/h)

The gas valve is factory set for natural gas (G20) and should need no adjustment. (LPG (G31) should be adjusted as described on the previous page). It should be checked that the supply pressure is 20mbar when the boiler is firing at full rate. This can be achieved by turning on several hot water taps and checking the inlet pressure at the inlet pressure test point on the gas valve shown in diagram 11.4. Turn taps off and disconnect pressure gauge.

In the unlikely event that the gas valve needs adjusting, refer to section 12.6. Re-setting of the gas valve requires a combustion analyser and any adjustment should only be carried out by a **competent person**.

Note that the burner pressure cannot be measured at the gas valve as it is altered by the suction of the fan and modulated according to demand.

11.6 Testing - Heating System

Check that all remote controls are calling for heat. The boiler will fire automatically. Fully open all radiator valves, flow control valve 'A', if fitted, see diagram 4.1.

Balance the radiators as required and if fitted adjust valve 'A' to give the required system differential. Turn off all radiators that can be shut off by the user and check to see if less than the maximum differential allowed of 20°C can be achieved across flow and return.

This boiler has a built in bypass, see diagram 11.5.

The boiler is supplied with the bypass open half a turn. It should not be necessary to adjust the bypass, but if required turn the adjustment screw clockwise to close the valve, see diagram 11.5.

Allow the system to reach maximum temperature then switch off the boiler by isolating from the electrical supply.

Drain the entire system rapidly whilst hot, using the drain tap at the lowest part of the system. Fill and vent the system as described previously in section 11.2.

Lock or remove the handle from control valve 'A', if fitted.

Replace inner casing panel and front casing panel.

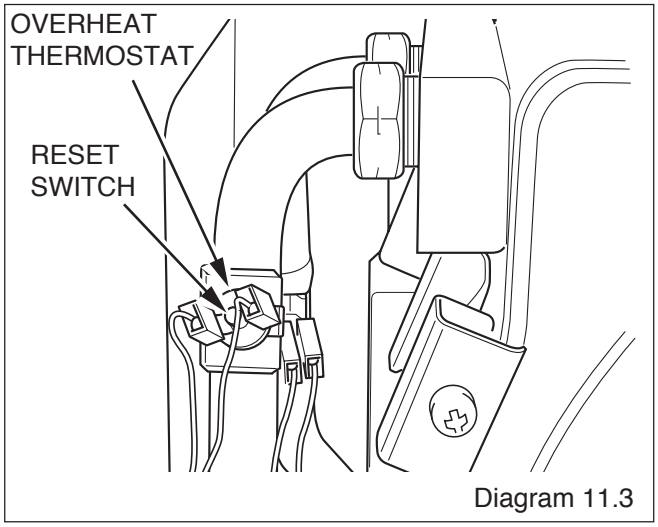

Diagram 11.3

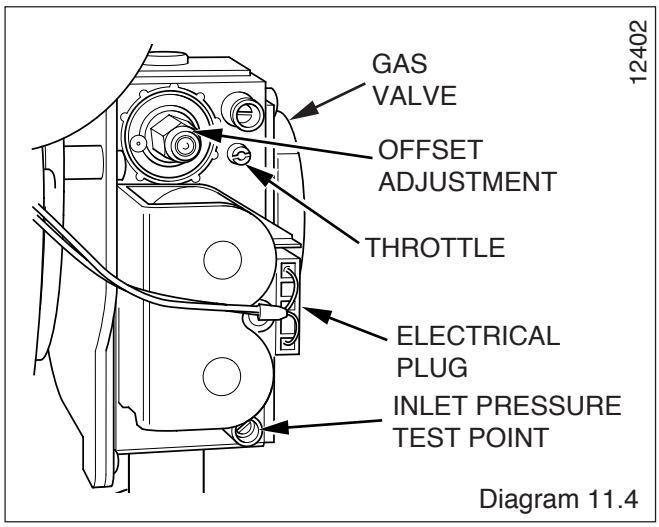

Diagram 11.4

11 Commissioning

11.7 Completion

Adjust the boiler temperature control and any system controls to their required settings. In addition it is necessary to complete the "Benchmark" logbook.

For IE, it is necessary to complete a "Declaration of Conformity" to indicate compliance to I.S.813. An example of this is given in the current edition of I.S.813.

Testing Flue Gases: If any doubt exists that the flue products are not exhausting correctly, investigate by use of a gas analyser (FGA).

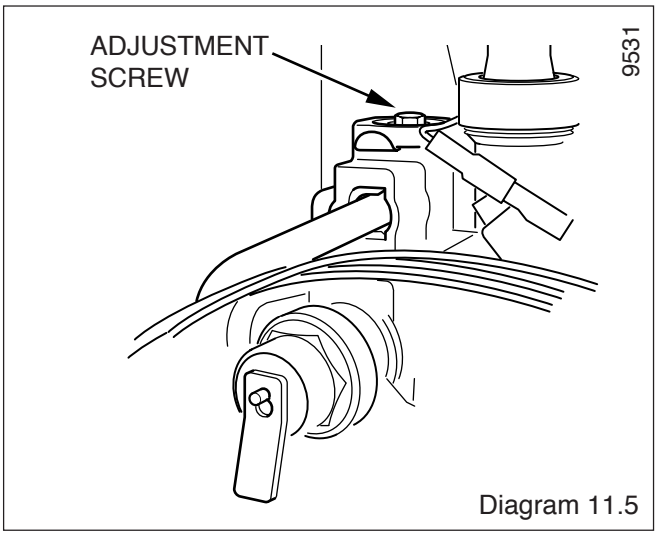

Diagram 11.5

11 Commissioning - Instructions to the User

11.8 User Controls and Options

The mains reset on/off switch is used to restart the boiler after a fault condition has occurred, i.e. ignition failure, low water pressure or high water temperature.

The central heating water temperature and hot water temperature control knobs allow the user to set the temperatures in each mode.

NOTE: If there is no demand the digital display shows the water pressure.

Temperature Display

The digital display normally shows the operating temperature of the unit when there is a central heating demand.

Holiday Mode

Normal mode uses the domestic hot water and central heating temperatures selected.

By turning the central heating water temperature and hot water temperature control knobs to minimum setting the holiday mode is set up. However, frost protection and pump exercise programme remain active. By doing this the DHW will operate without pre-heat and DHW will set at maximum temperature. To resume normal operation after a holiday period, return the control knobs to their original position.

11.9 Pump Exercise Program

After a power cut or every 24 hours in holiday mode the three way valve will switch and the pump will run to prevent the components from sticking. This will also occur during normal operating if there is no domestic or central heating demand for more than 24 hours**.**

11.10 Frost Protection

The boiler has a built in frost protection programme as long as the electricity and gas are left switched on.

This device operates the appliance pump when the temperature inside the boiler falls below 7°C and circulates water around the appliance only.

If the temperature falls to 3°C the burner is lit and water circulates around the heating system.

When the temperature inside the appliance reaches 10°C the burner will shut down and after a short period the pump will stop.

This device primarily protects the boiler. Any other exposed areas of the system should be protected by a separate frost thermostat.

11.11 Instruct the User

Instruct and demonstrate the lighting procedure and advise the user on the safe and efficient operation of the boiler.

Instruct on and demonstrate the operation of any heating system controls.

Advise the user on the use and maintenance of any scale reducer and pass on any relevant instructional documents.

Advise that to ensure the continued efficient and safe operation of the boiler it is recommended that it is checked and serviced at regular intervals. The frequency of servicing will depend upon the installation conditions and usage, but in general, once a year should be enough.

Draw attention, if applicable, to the current issue of the Gas Safety (Installation and Use) Regulations, Section 35, which imposes a duty of care on all persons who let out any property containing a gas appliance in the UK.

The user shall not interfere with or adjust sealed components.

It is the Law that any servicing is carried out by a **competent person**.

Advise the user that, like all condensing boilers this appliance will produce a plume of condensation from the flue terminal in cool weather. This is due to the high efficiency and hence low flue gas temperature of the boiler.

Advise the user of the precautions necessary to prevent damage to the system, boiler and the building, in the event of the heating system being out of use during frost or freezing conditions.

Advise the user that the permanent mains electrical supply SHOULD NOT be switched off, as the built in frost protection and pump/valve saver program would not be operable.

Reminder, leave these instructions and the 'Benchmark' logbook with the user.

Important Notes

To ensure the continued efficient and safe operation of the boiler it is recommended that it is checked and serviced at regular intervals. The frequency of servicing will depend upon the particular installation and usage, but in general once a year should be enough.

It is the Law that any servicing is carried out by a **competent person**.

When replacing a part on this appliance, use only spare parts that you can be assured conform to the safety and performance specification that we require. Do not use reconditioned or copy parts that have not been clearly authorised by Glow-worm.

12.1 General

Refer to Table 2 Section 1 Technical Information. Measurement of the products of combustion can be achieved by connection of a probe to the combustion analyser test point, see diagram 12.1.

IMPORTANT NOTE: Products of combustion will be discharged when the cap is removed. It is important to replace the cap immediately.

Before commencing with a service or replacement of parts the boiler should be isolated from the electrical supply and the gas supply should be turned off at the gas isolation valve, see diagram 7.1.

All routine servicing requirements can be achieved by the removal of the front panel and inner panel only. To remove simply undo the two screws on the underside of the front panel and lift off, see diagram 11.1. Undo the two screws on the front of inner panel and lift off, see diagram 11.1.

Unless stated otherwise any part removed during servicing should be replaced in the reverse order to removal.

Servicing should always include the removal of any debris from the condensate pipe and siphon.

After completing any servicing of gas carrying components, ALWAYS test for gas soundness and carry out a functional test of the controls.

Testing Flue Gases: If any doubt exists that the flue products are not exhausting correctly, investigate by use of a gas analyser (FGA).

12.2 Spark Electrode

Disconnect the electrode lead and two securing screws. Withdraw the spark electrode carefully from the combustion chamber, see diagram 12.3 and 12.6.

Inspect the tips for damage.

Clean away any debris and check the spark gap is 3.5 to 4.5 mm.

Check the electrode gasket for signs of damage and replace if necessary.

12.3 Burner

Drop down the control panel into the service position, see diagram 12.2.

Disconnect the gas supply at the gas service cock, see diagram 7.1.

Remove the two gas pipe retaining clips, one located below gas valve and the other one located on the underside of the boiler chassis, see diagram 12.5.

Pull sealing grommet down gas pipe, see diagram 12.5.

Push the gas pipe upwards further into gas valve connection and then rotate anti-clockwise (looking down) until the gas pipe end is over the large hole in boiler chassis, see diagram 12.5.

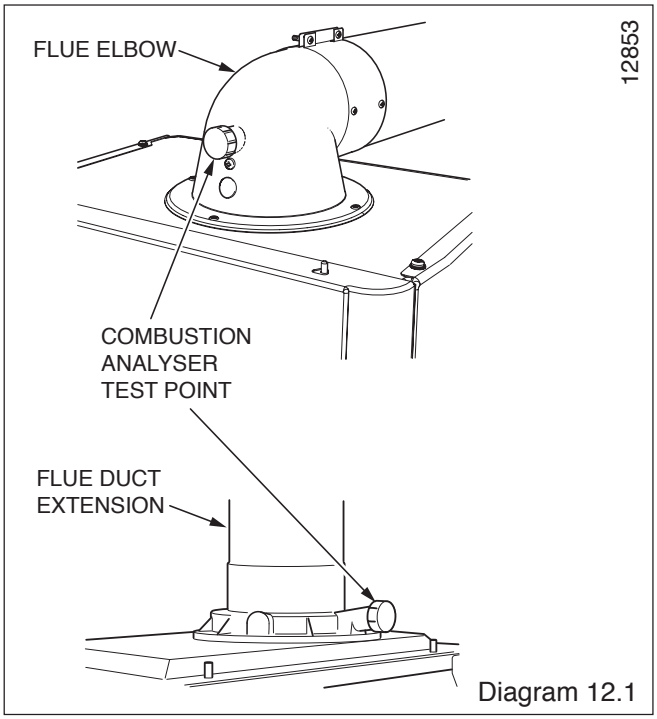

Diagram 12.1

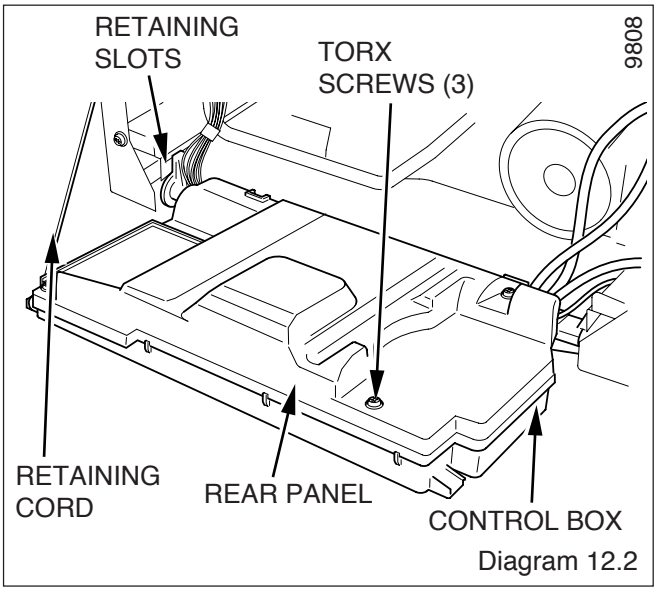

Diagram 12.2

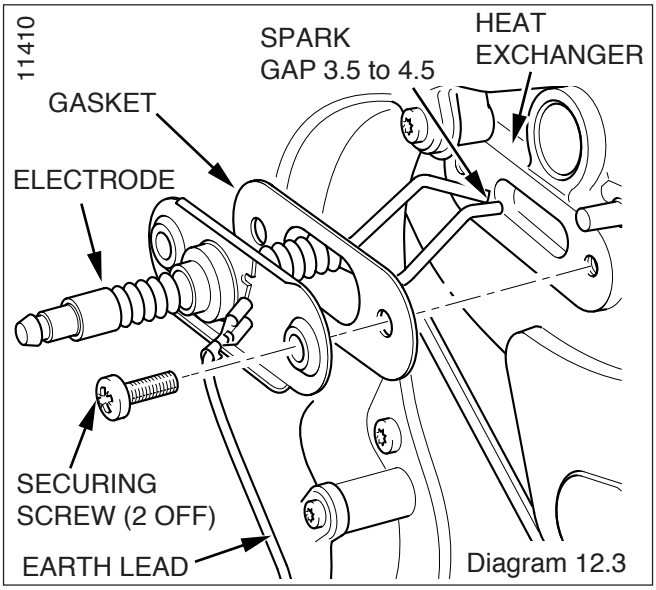

Diagram 12.3

Withdraw the gas pipe from gas valve connection and remove.

NOTE: When replacing ensure that the sealing grommet, situated below the gas valve is correctly re-seated.

Disconnect the gas valve electrical plug at the gas valve.

Disconnect the electrical leads from the fan.

Remove the five combustion chamber front retaining nuts, see diagram 12.6.

Gently remove the fan, gas valve and burner assembly from the combustion chamber, see diagram 12.4.

Clean the burner with a soft brush taking great care not to damage the front insulation. DO NOT use wire or sharp instruments to clean the holes of the burner.

Inspect the burner for any signs of damage.

Inspect the sealing rings and replace if necessary.

Removal of the burner is not necessary during a normal service.

NOTE: IF THE BURNER HAS TO BE REMOVED IT WILL REQUIRE A NEW GASKET WHEN REFITTED.

12.4 Combustion Chamber and Heat Exchanger

Refer to diagram 12.4.

Remove loose debris from combustion chamber using a soft brush and vacuum cleaner. Carefully flush by spraying water any remaining debris through the condensate trap (Ensure the water is kept away from electrical components).

12.5 Condensate Drain

The condense drain does not normally need removing during servicing.

To flush the condense drain carefully pour water into the heat exchanger and check that water flows freely to drain.

If the condense drain is blocked refer to section 14.33 for removal.

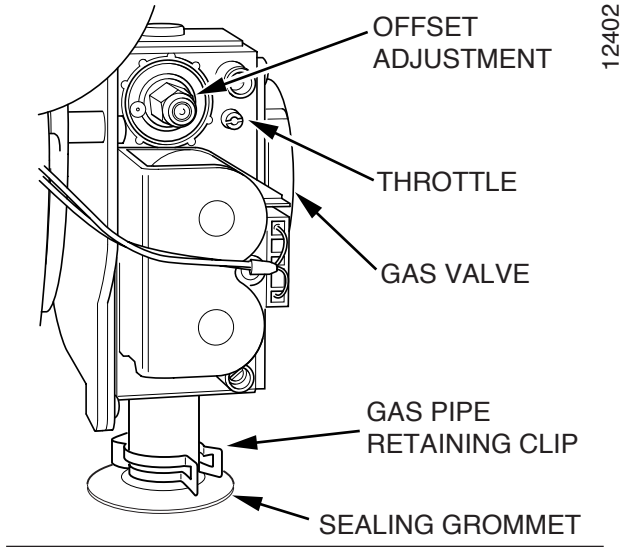

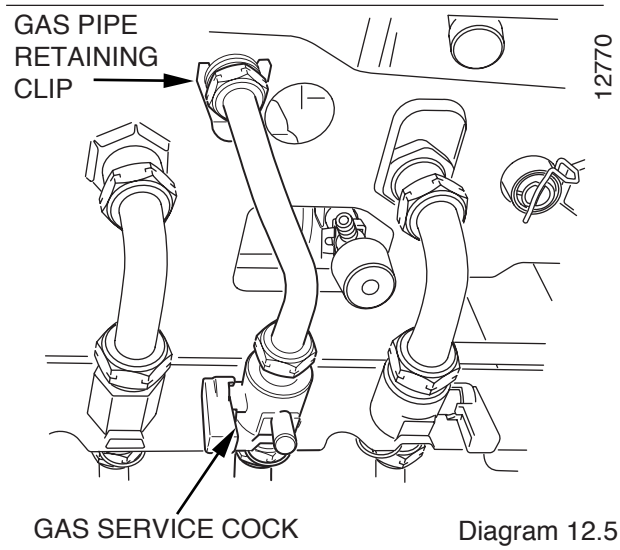

Diagram 12.5

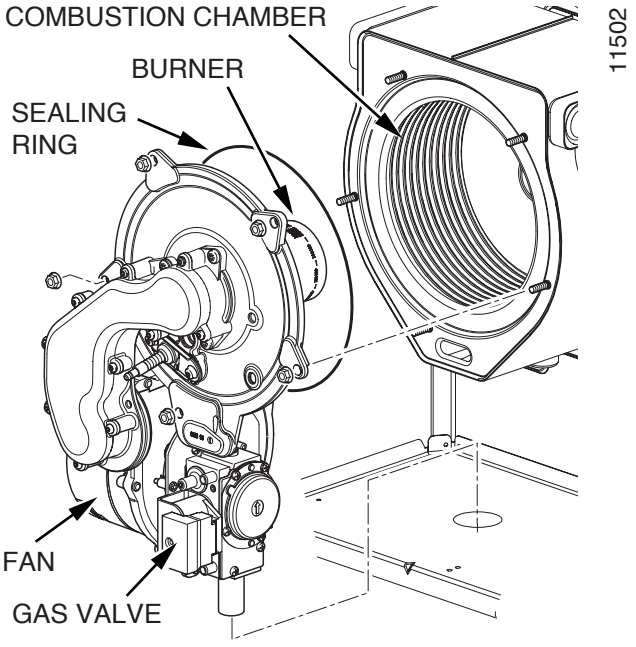

Diagram 12.4

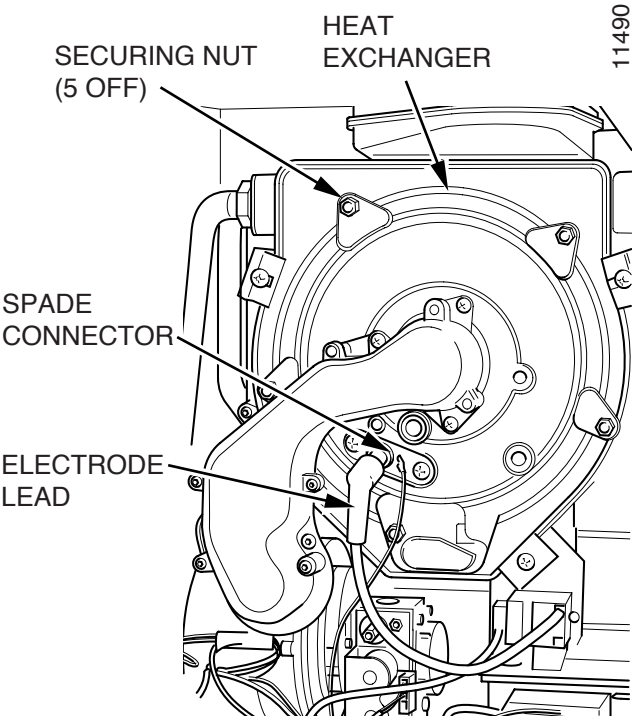

Diagram 12.6

12.6 Combustion Check.

If a gas carrying component has been replaced, the combustion of the appliance should be checked as follows. Once the appliance has been re-assembled (apart from the front and inner casing panels) connect a CO_2 combustion analyser to the test point on the flue adapter, see diagram 12.1.

Turn on the gas service cock, see diagram 7.1.

With the power off and the appliance cold, unclip the controls fascia and hinge it down to reveal the potentiometers on the rear of the User interface, see diagram 12.7. Take care not to allow the fascia to drop down and damage the wiring.

Turn on the electrical supply.

Ensure external controls are calling for heat. The boiler should fire automatically.

Allow the boiler to fire for a minimum of 60 seconds and then, using an electrical screwdriver, rotate the service potentiometer fully clockwise, see diagram 12.7. This will allow the digital display to indicate the 'flashing' fan speed on the appliance fascia.

In the fully clockwise position the display should be indicating the maximum fan speed of the appliance, in central heating mode this should be 39±1 for 24cxi, 45±1 for 30cxi and 45±1 for 38cxi. With domestic hot water max. demand this should be 51±1 for 24cxi, 57±1 for 30cxi and 57±1 for 38cxi. Check the CO_2 value, which should be 9.1% +0.2 -0.5.

Note that with the inner casing panel fitted the combustion readings will increase slightly to 9.3% +0.3 -0.5.

If adjustment proves necessary then proceed as follows.

Any adjustment to the gas valve should only be carried out by a **competent person**.

Refer to diagram 11.4.

Adjust the maximum rate CO_2 with the throttle to 9.1%. (Rotate anti-clockwise to increase).

Rotate the service potentiometer fully anti-clockwise. Hold it in this position for about 5 seconds before rotating the service potentiometer clockwise to the mid-point or 3 o'clock position. The fan should reduce to 1200 ± 100 rpm which will flash '12' ±1 on the digital display.

Check the CO_2 value, which should be 9.1% +0.2 -0.5.

For Propane the CO_2 value, should be 10.5% +0.3 -0.7.

If adjustment proves necessary then proceed as follows.

Adjustment of the CO_2 at minimum rate is very coarse so carefully adjust the CO_2 with the offset adjustment to 9.1%, see diagram 11.4.

Rotate the service potentiometer fully clockwise, see diagram 12.7 and re-check the maximum rate combustion, which should be 9.1% +0.2 -0.5.

After checking combustion rotate the service potentiometer fully anti-clockwise so that the display indicates the water temperature.

Replace the cap on the test point and refit the control cover rear panel.

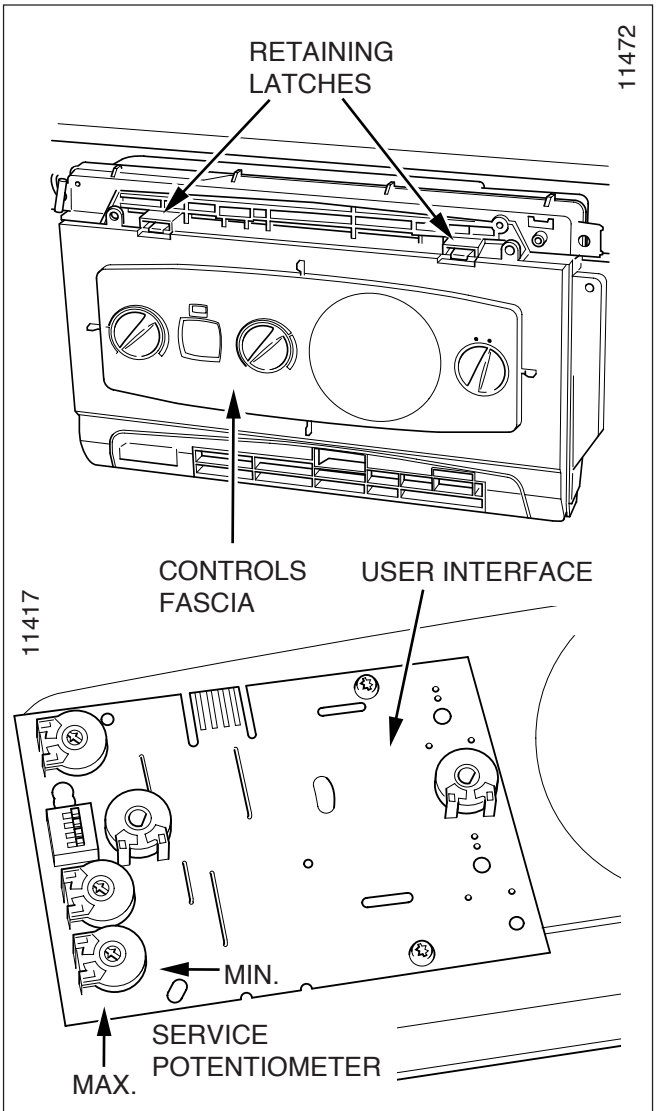

POTENTIOMETERS Diagram 12.7

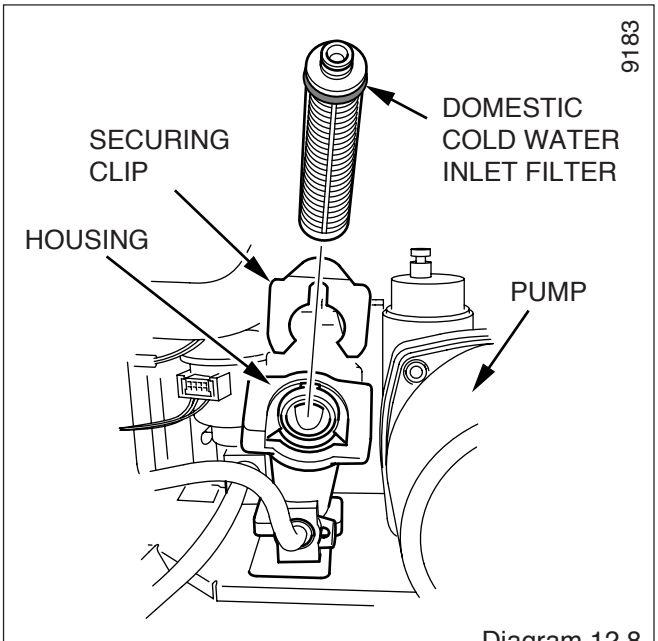

Diagram 12.8

12.7 Domestic Cold Water Inlet Filter

If the water flow rate through the appliance has reduced it may be necessary to clean or replace the water inlet filter.

Turn off the electrical supply to the boiler.

Refer to section 12.10 and drain the domestic hot water circuit.

Slide out the securing clip, which holds the filter in its housing to the left of the pump, remove the filter to clean or renew if necessary, see diagram 12.8.

Replace the filter into its housing and replace the securing clip.

Open the cold water isolating valve and test the Domestic Hot Water circuit for soundness.

Check for leaks.

12.8 Central Heating Return Filter

Turn off the electrical supply to the boiler.

Refer to section 12.9 and drain the heating circuit of the boiler.

Remove the filter retaining clip and filter clean or renew if necessary, see diagram 12.9.

Refit the filter, ensuring the correct orientation. The flat and hole in the filter as shown in diagram 12.9. Secure with retaining clip.

Open the heating flow and return isolating valves and refill, vent and pressurise the heating circuit. See section 11.2.

Check for leaks.

12.9 Draining of Boiler Heating Circuit

Drain down the Heating Circuit of the boiler only, by closing the heating flow and return isolating valves on the wall mounting jig, see diagram 7.1.

Attach a length of hose to the drain point and open the drain valve, see diagram 12.10.

After servicing or replacing parts, close the drain valve and remove the hose. Open the heating flow and return isolating valves and refill, vent and pressurise the heating circuit. See section 11.2.

Check for leaks.

12.10 Draining of Boiler Hot Water Circuit

Drain the Domestic Hot Water circuit by closing the cold-water isolation valve on the wall mounting jig.

Open one or more hot water taps to drain the hot water circuit.

After servicing or replacing parts open the cold-water isolation valve and slowly open a hot water tap to remove air. Close the hot water tap and check for any leaks.

12.11 Inner Casing Panel Seal Check.

Check the condition of the seal, replace as required.

To replace remove the old seal, thoroughly clean the casing sufaces. Fit the new seal, it is supplied to the correct length, see diagram 12.11.

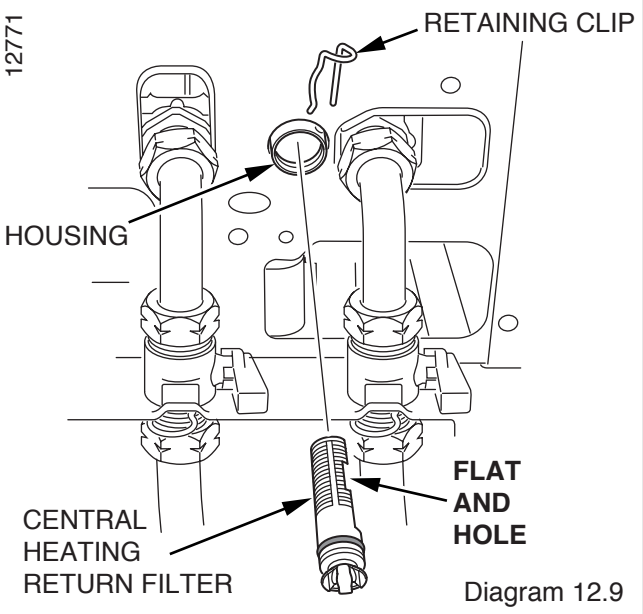

Diagram 12.9

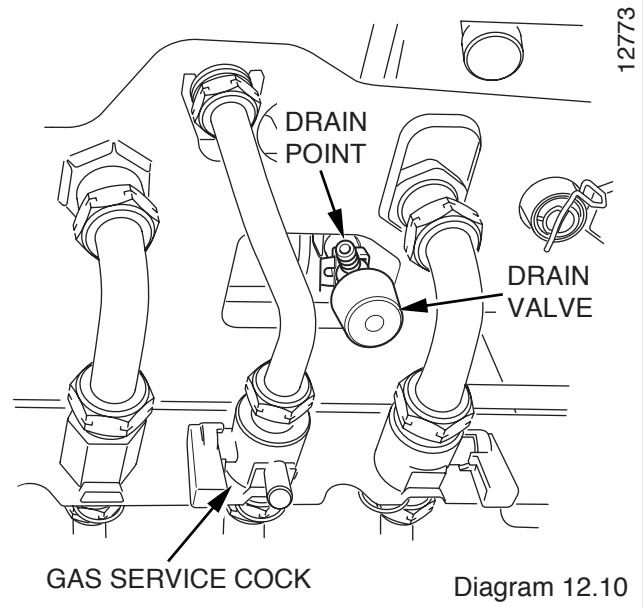

Diagram 12.10

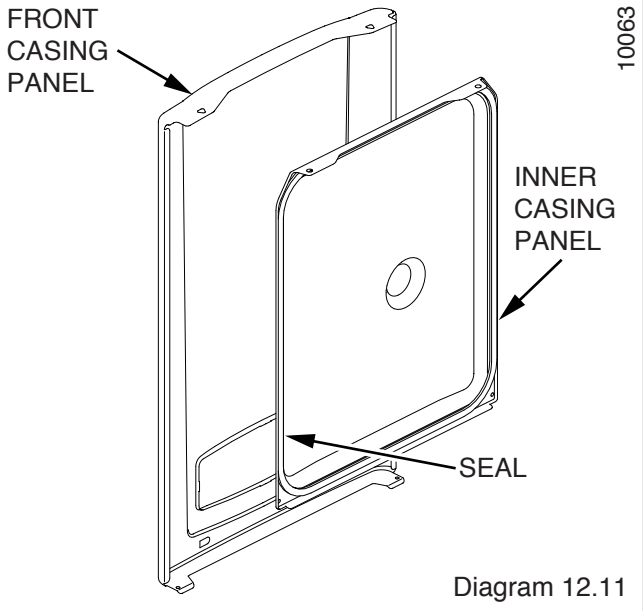

Diagram 12.11

13 Fault Finding

NOTE

Before trying to operate the boiler make sure that :

- All gas supply cocks are open and that the gas supply has been purged of air.
- There is a permanent mains supply to the boiler.
- There is a heating demand from the external controls.

WARNING.

Always isolate the boiler from the electrical supply before carrying out any electrical replacement work.

Always check for gas soundness after any service work.

Electrical Testing

Should there be any doubt about the voltage supply to any of the components, it is possible to carry out a simple electrical test.

Important. On completion of the Service/Fault Finding tasks which have required the breaking and remaking of the electrical connections the earth continuity, polarity, short circuit and resistance to earth checks must be repeated using a suitable multimeter.

To carry out the electrical test, gain access, as follows:

Hinge down the control box and remove Torx screws and unhook the rear panel, refer diagram 12.2.

Refer to the Wiring diagram 13.1 and fault finding charts diagrams 13.2 and 13.3.

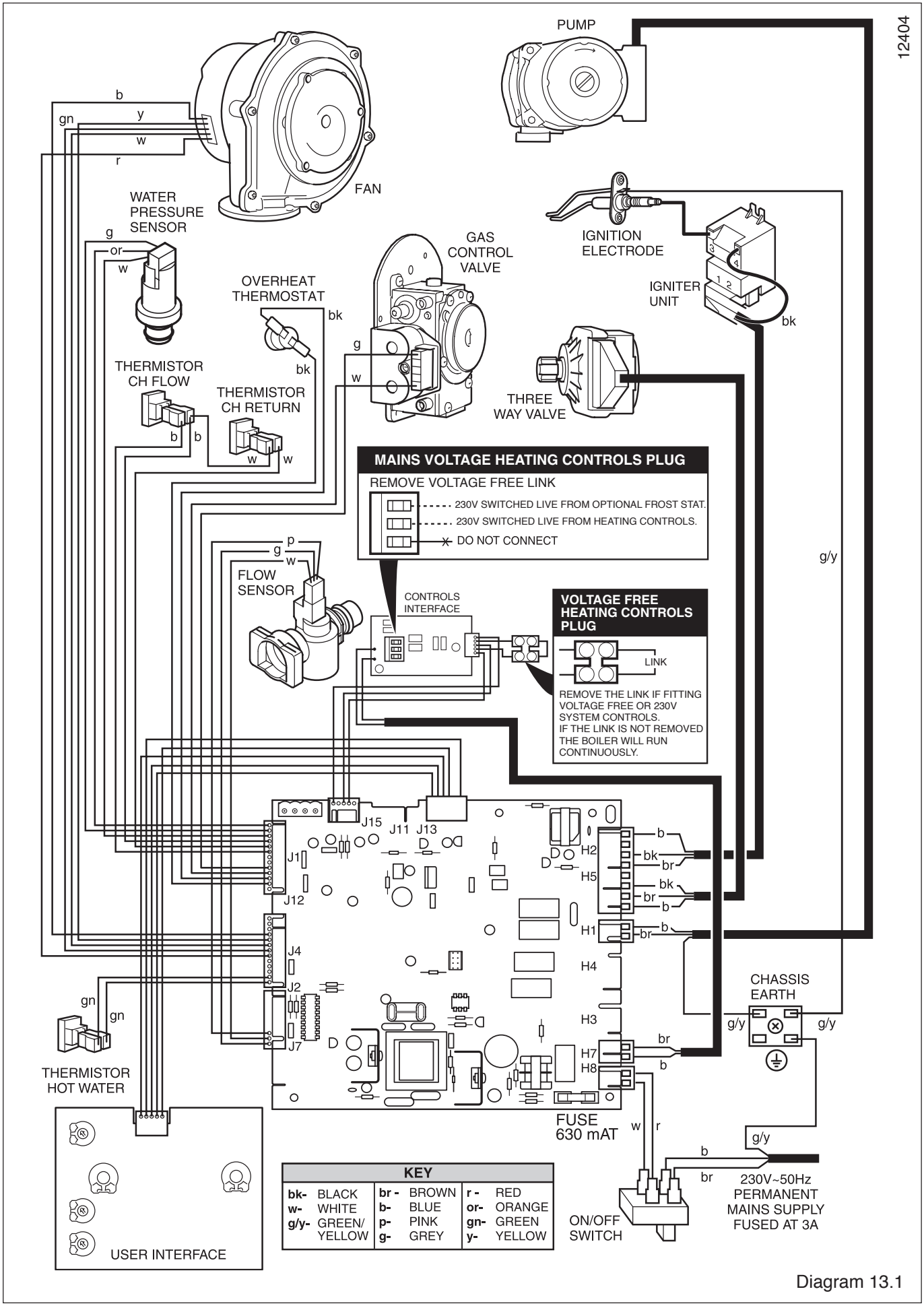
12404
PUMP
FAN
WATER PRESSURE SENSOR
GAS CONTROL VALVE
IGNITION ELECTRODE
IGNITER UNIT
OVERHEAT THERMOSTAT
THERMISTOR CH FLOW
THERMISTOR CH RETURN
THREE WAY VALVE
MAINS VOLTAGE HEATING CONTROLS PLUG
REMOVE VOLTAGE FREE LINK
230V SWITCHED LIVE FROM OPTIONAL FROST STAT.
230V SWITCHED LIVE FROM HEATING CONTROLS.
DO NOT CONNECT
FLOW SENSOR
CONTROLS INTERFACE
VOLTAGE FREE HEATING CONTROLS PLUG
LINK
REMOVE THE LINK IF FITTING VOLTAGE FREE OR 230V SYSTEM CONTROLS.
IF THE LINK IS NOT REMOVED THE BOILER WILL RUN CONTINUOUSLY.
J15
J11
J13
J1
J12
J4
J2
J7
H2
H5
H1
H4
H3
H7
H8
CHASSIS EARTH
THERMISTOR HOT WATER
FUSE 630 mAT
ON/OFF SWITCH
230V~50Hz PERMANENT MAINS SUPPLY FUSED AT 3A
USER INTERFACE
KEY
bk- BLACK
w- WHITE
g/y- GREEN/YELLOW
br - BROWN
b- BLUE
p- PINK
g- GREY
r - RED
or- ORANGE
gn- GREEN
y- YELLOW

Diagram 13.1

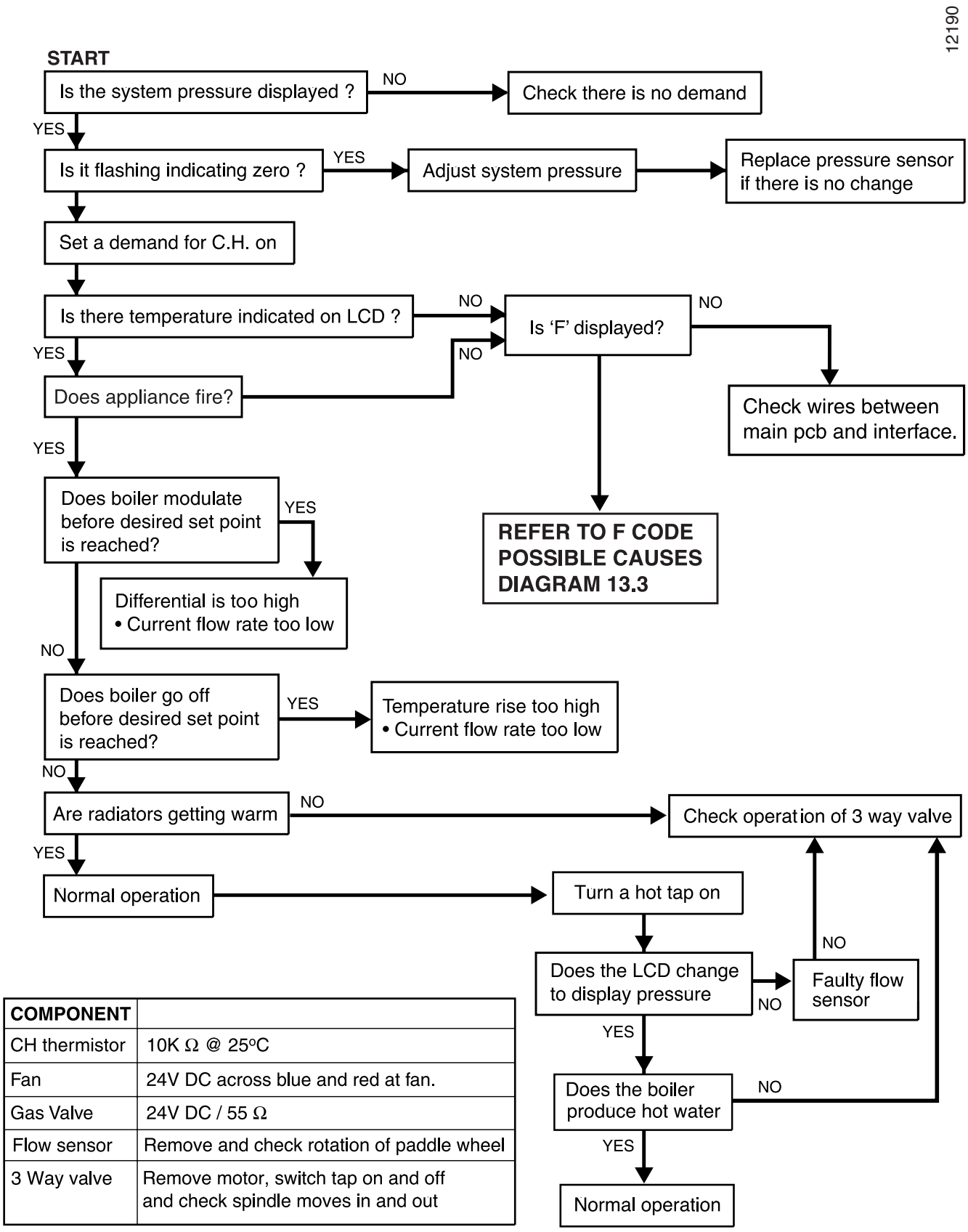

COMPONENT	
CH thermistor	10K Ω @ 25°C
Fan	24V DC across blue and red at fan.
Gas Valve	24V DC / 55 Ω
Flow sensor	Remove and check rotation of paddle wheel
3 Way valve	Remove motor, switch tap on and off and check spindle moves in and out

Diagram 13.2

13 Fault Finding

12352

CODE	DESCRIPTION	POSSIBLE CAUSE
F1	Ignition fault (lockout) Boiler failed to light	No gas Insufficient gas Incorrect gas valve adjustment Electrode Ignition lead defect Electronic igniter defective Check air inlet duct Check connections to igniter unit
F4	Ignition fault (lockout) Went out when lit	As **F1 possible cause**
F5	Overheat fault	Overheat stat operated Maximum temperature exceeded Check thermistor connections Air in system with thermistor at maximum setting Faulty overheat stat connection Check that pump is wired into appliance and not from programmer. This would cause no pump overrun
F6	Central heating flow thermistor fault	Thermistor cable defective/broken, thermistor faulty Check that thermistor attached correctly to pipe
F7	Domestic Hot Water thermistor fault	Thermistor cable defective/broken, thermistor faulty Check that thermistor attached correctly to pipe
F9	Water pressure sensor fault	Faulty sensor connection Check wiring
F10	Central heating return thermistor fault	Thermistor cable defective/broken, thermistor faulty Check that thermistor attached correctly to pipe
F11	Main board connection fault	Check wiring between mainboard and user interface
F12	User interface connection fault	Check wiring between mainboard and user interface
F13	Main PCB connection fault	Check connections and wires
F14	Central heating flow temperature is greater than 95°C	System fault Possible pump failure Check Thermistor on flow
F16	Flame detection fault (flame presence for more than 5 seconds after burner stop)	Gas valve defective
F17	Power supply is less than 170V	Check electrical supply / polarity
F18	User interface fault	Faulty User Interface
F19	Central heating thermistor unplugged	Check Thermistor connection
F20	Software incompatibility	Incorrect user interface or Main PCB
F24	Central heating return temperature is greater than 90°C	System fault Possible pump failure Check Thermistor on return
F25	Maximum temperature rise slope	Possible pump failure Air in system
F26	Maximum delta temperature	Check Thermistor on return System - too restrictive

Diagram 13.3

14 Replacement of Parts

14.1 General

Replacement of parts must be carried out by a **competent person**.

Before replacing any parts the boiler should be isolated from the mains electric supply and the gas should be turned off at the service cock on the boiler, see diagram 7.1.

Unless stated otherwise parts are replaced in the reverse order to removal.

After replacing any parts always test for gas soundness and if necessary carry out functional test of the controls.

For replacement of parts the front casing and the inner casing panel of the boiler will need to be removed. To remove undo the two screws on the underside of the front casing and lift off. Undo the two screws on the front of the inner front panel and lift off.

The side panels can be hinged sideways to aid replacement of parts.

To hinge a side panel undo and remove the three screws securing each side panel to the boiler, two at the front and one at the top.

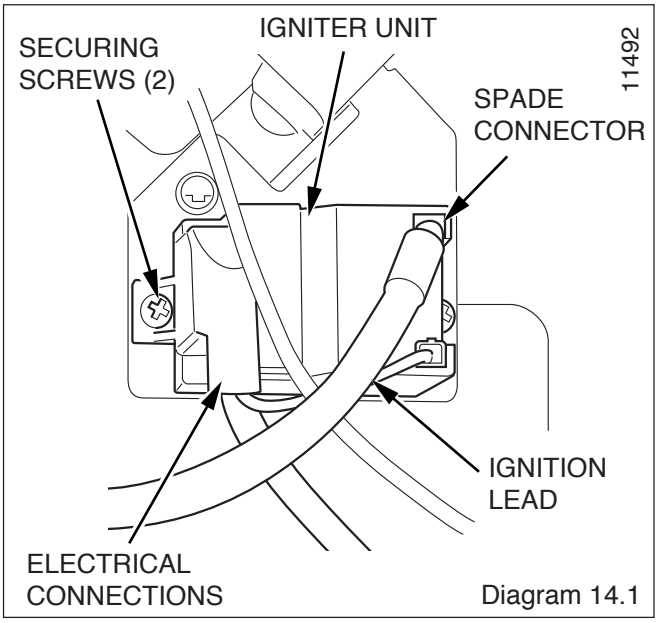

Diagram 14.1

14.2 Spark Electrode

For access, refer to section 14.1.

Remove the spark plug lead, earth lead and two securing screws. Withdraw the spark electrode carefully from the combustion chamber, see diagram 12.3.

14.3 Igniter Unit

For access, refer to section 14.1.

Remove ignition lead and electrical connections then remove igniter unit by removing two securing screws, see diagram 14.1.

14.4 Ignition Lead

For access, refer to section 14.1.

Refer to diagram 12.6.

Pull the spark plug style connector off the spark electrode and the spade connector connected to the igniter unit, see diagram 14.1.

14.5 Gas Valve

For access, refer to section 14.1.

Remove the electrical plug from the gas valve, see diagram 14.2.

Refer to section 12.3 for removal of the fan, gas valve and burner assembly.

Before removing the gas valve note its position on the fan.

Remove the three securing screws, which fix the gas valve and plastic swirl plate to the venturi on the fan, see diagram 14.3.

Remove the gas valve.

When re-fitting the gas valve take care as it can be fitted more than one way.

After re-fitting check the combustion CO_2 and adjust if necessary, see section 12.6.

After assembly test for gas soundness and purge in accordance with the current issue of BS6891or in IE, the current edition of I.S.813 "Domestic Gas Installations".

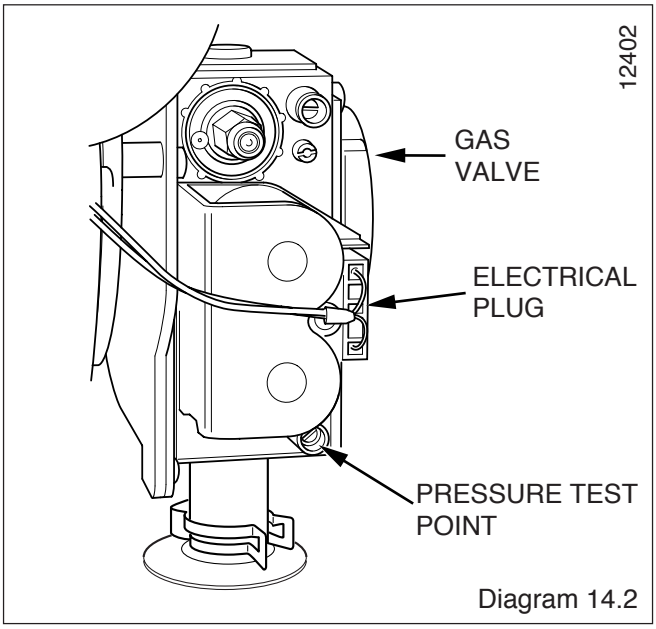

Diagram 14.2

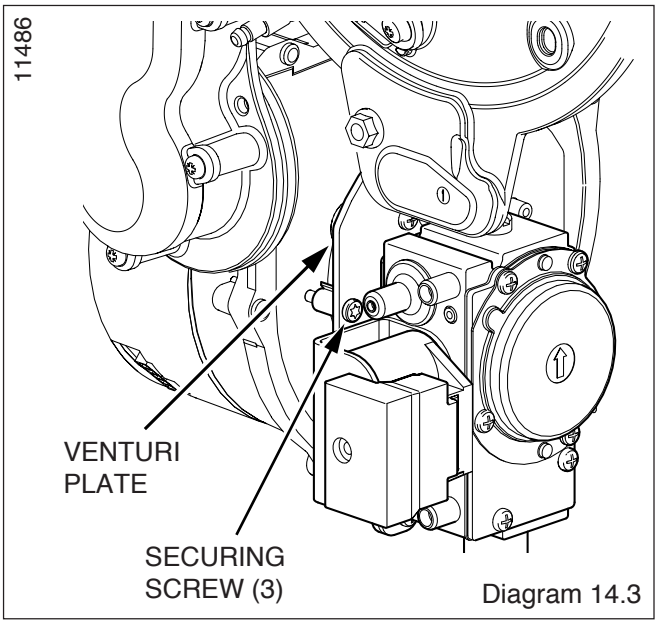

Diagram 14.3

14.6 Fan

For access, refer to section 14.1.

Refer to section 12.3 for removal of the fan, gas valve and burner assembly.

Remove the gas valve as described in the relevant parts of section 14.5.

Remove the venturi plate secured with three screws, see diagram 14.3.

Remove the two screws securing the fan to the gas manifold, see diagram 14.4, check the gasket and replace if necessary.

NOTE : The 30 fan is secured through an extension piece with two securing screws, check and replace any seals or gaskets if necessary.

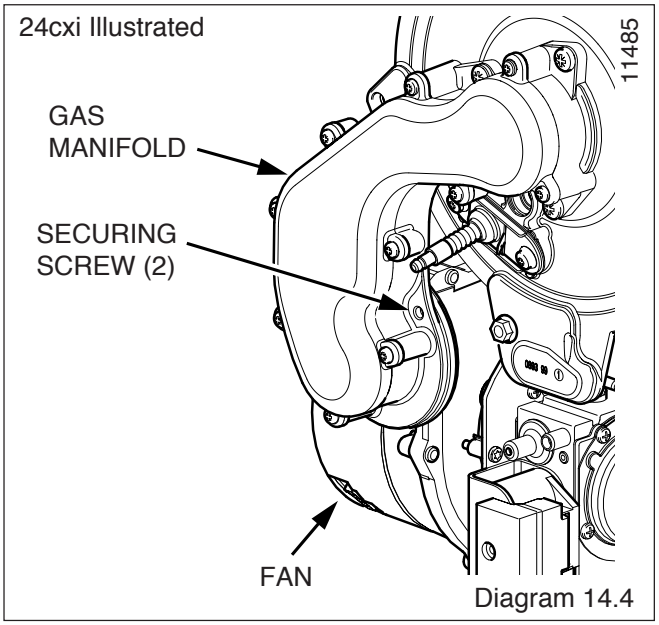

Diagram 14.4

14.7 Burner

For access, refer to section 14.1.

Refer to section 12.3 for removal of the fan, gas valve and burner assembly.

Remove the four screws that secure the burner, see diagram 14.5.

NOTE: THE BURNER WILL REQUIRE A NEW GASKET WHEN REFITTED.

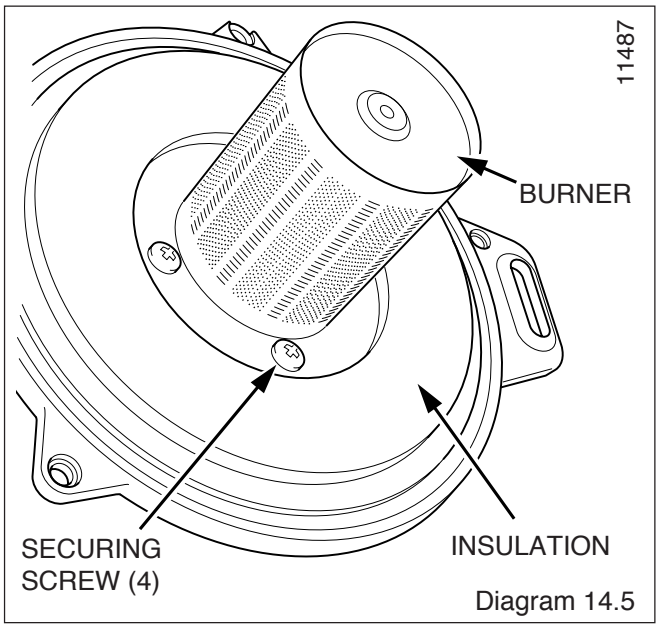

Diagram 14.5

14.8 Front Insulation

For access, refer to section 14.1.

Refer to section 12.3 for removal of the fan, gas valve and burner assembly.

Remove burner as per section 14.7.

Remove spark electrode, see section 14.2.

NOTE: THE BURNER WILL REQUIRE A NEW GASKET WHEN REFITTED.

14.9 Rear Insulation

For access, refer to section 14.1.

Refer to section 12.3 for removal of the fan, gas valve and burner assembly.

Remove securing screw and washer in the centre of the insulation and withdraw insulation, see diagram 14.6.

14.10 Viewing Window

For access, refer to section 14.1.

Refer to diagram 14.7.

Remove circlip.

Remove steel washer.

Remove glass.

Remove fibre washer.

Replace in reverse order.

14.11 Expansion Vessel

For access, refer to section 14.1.

Refer to section 12.9 and drain the boiler heating circuit.

Undo the coupling at the base of the vessel, see diagram 14.8.

While holding the vessel remove the securing bolt on the top panel of the boiler. Remove upper support bracket.

Lift the vessel up, draw bottom out to the left, lower and remove.

Fit the replacement unit.

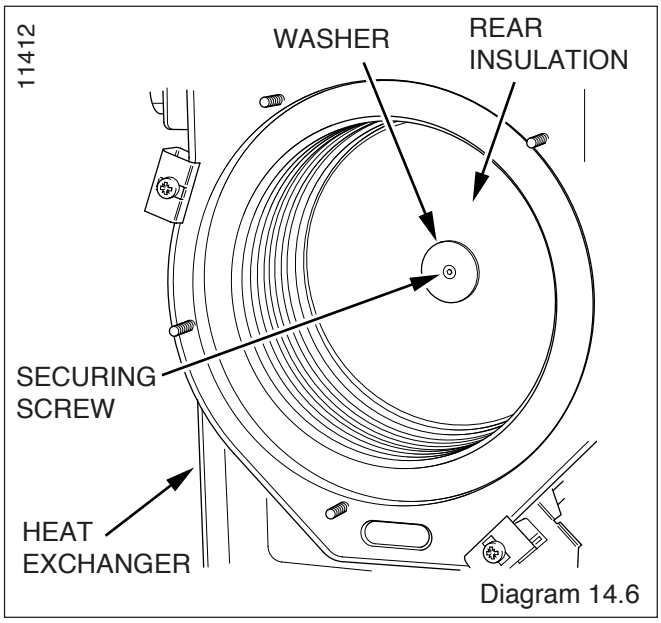

Diagram 14.6

Fit a new gasket between the expansion vessel and coupling.

Refill, vent and pressurise the boiler.

Check for leaks.

14.12 Heat Exchanger

Refer to Manual Handling section on page 5.

For access, refer to section 14.1.

Refer to section 12.3 for removal of the fan, gas valve and burner assembly.

Drain the boiler heating circuit, see section 12.9.

Drain the boiler hot water circuit, see section 12.10.

Remove the clip securing the clear condense pipe to heat exchanger.

Pull to remove the clear condense pipe out of the bottom of the heat exchanger.

Undo the two nuts of the flow and return pipes from the heat exchanger.

Move the pipes away from the heat exchanger.

Loosen the three heat exchanger securing screws and clamps (two at the top and one at the bottom) to remove the heat exchanger, see diagram 14.9.

CAUTION: There will be water in the heat exchanger.

Remove condense pipe connector from bottom of heat exchanger.

Carefully ease heat exchanger out.

14.13 Flue Hood

For access, refer to section 14.1.

Remove heat exchanger as per section 14.12.

Remove the two securing screws and pull the flue hood down and away from the flue hood bracket and flue elbow, see diagram 14.10.

14.14 Diverter Valve Motor

For access, refer to section 14.1.

Refer to diagram 14.11.

Remove the electrical plug.

Remove the retaining clip.

Ease the diverter valve motor from its housing and remove.

14.15 Pump (head only)

For access, refer to section 14.1.

Refer to section 12.9 and drain the boiler heating circuit.

Refer to diagram 14.12.

Remove the four cap head screws.

Carefully remove the pump head together with cable. Do not strain cable.

Support the pump head, unscrew cable cover at the side of pump head and take off.

Disconnect wiring from pump head.

Reconnect wiring to new pump head and fit cover.

Fit the new pump head with 'O' ring.

Refill, vent and pressurise the boiler.

Check for leaks.

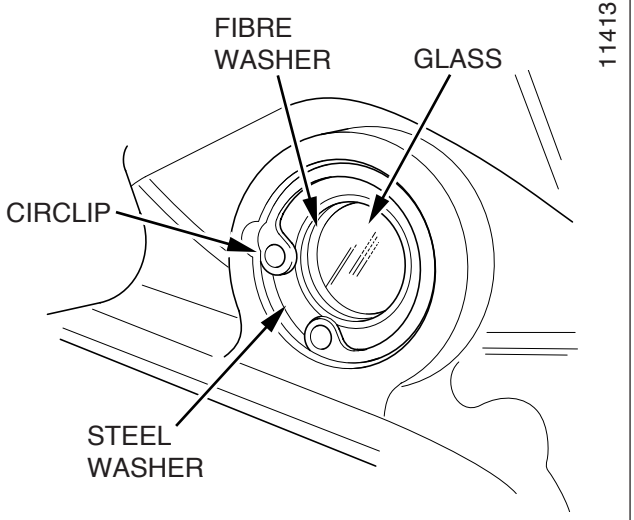

Diagram 14.7

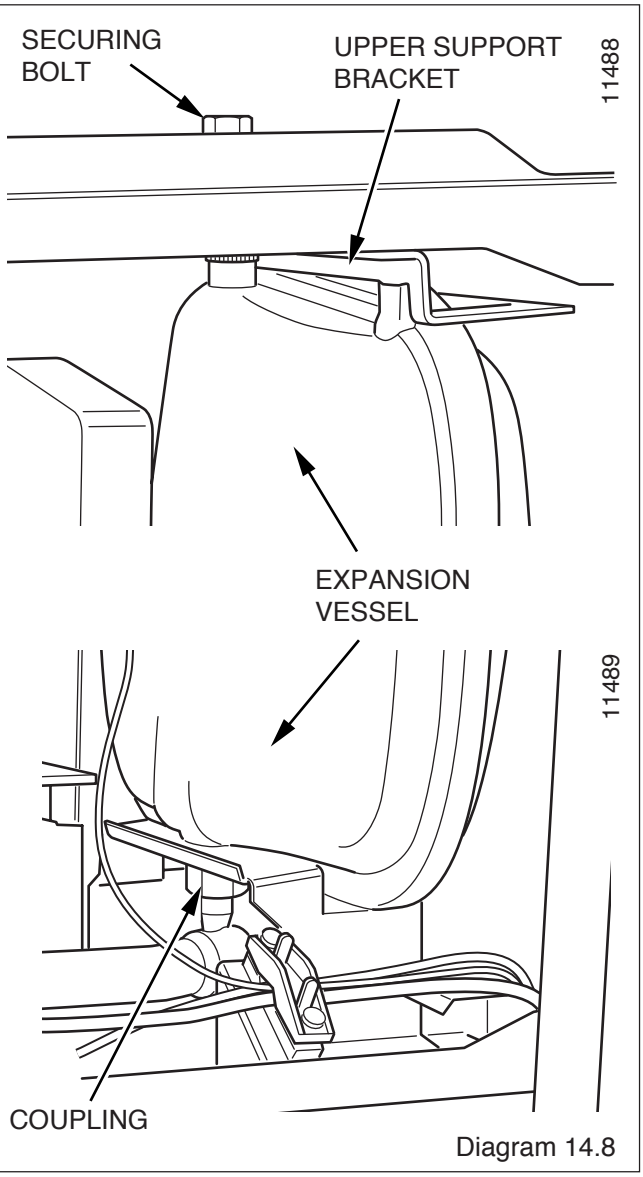

Diagram 14.8

14.16 Safety Discharge Valve

For access, refer to section 14.1.

Refer to section 12.9 and drain the boiler heating circuit.

Refer to diagram 14.13.

Undo the safety discharge valve union and remove from the pipework.

Remove the securing clip and withdraw the safety discharge valve.

Fit new 'O' ring.

Refill, vent and pressurise the boiler.

Check for leaks.

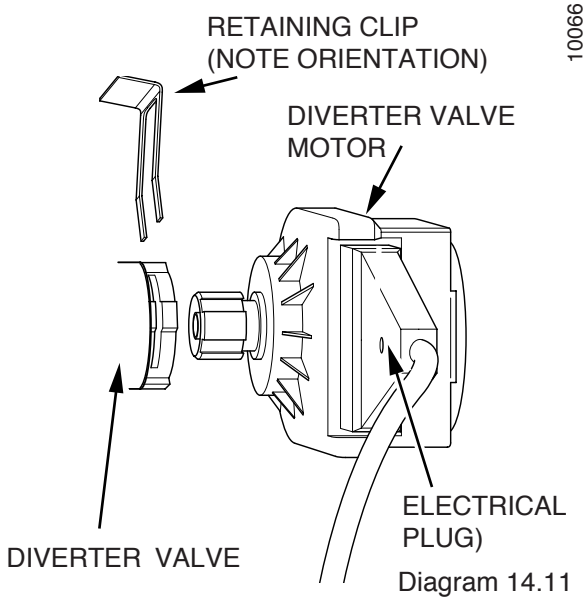

Diagram 14.11

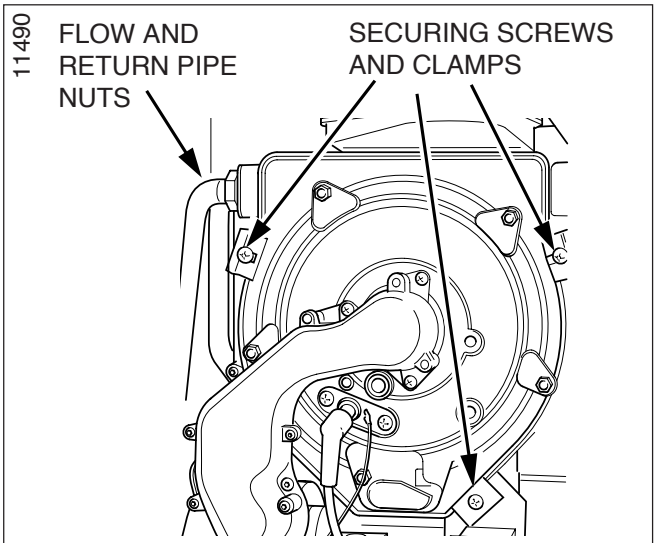

Diagram 14.9

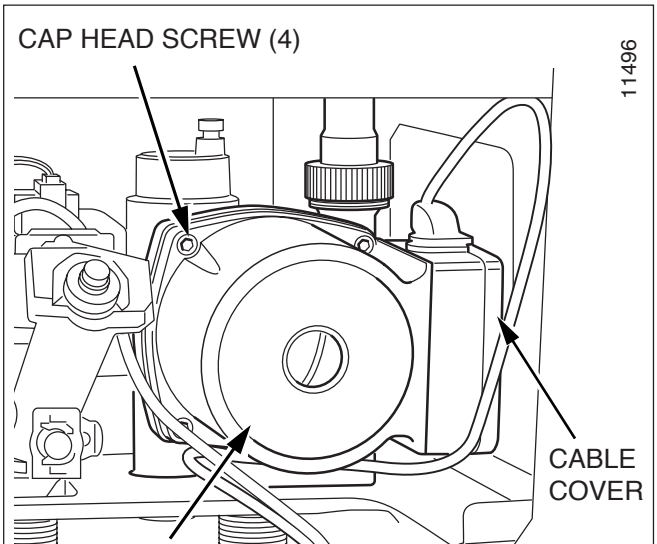

Diagram 14.12

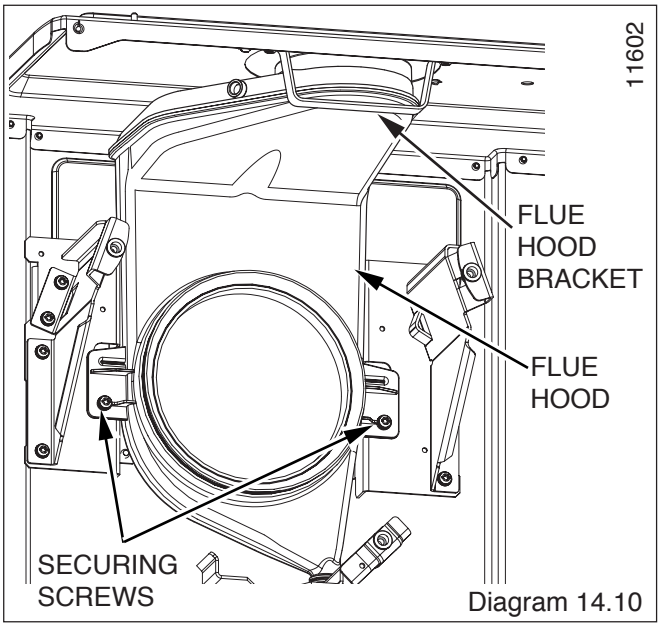

Diagram 14.10

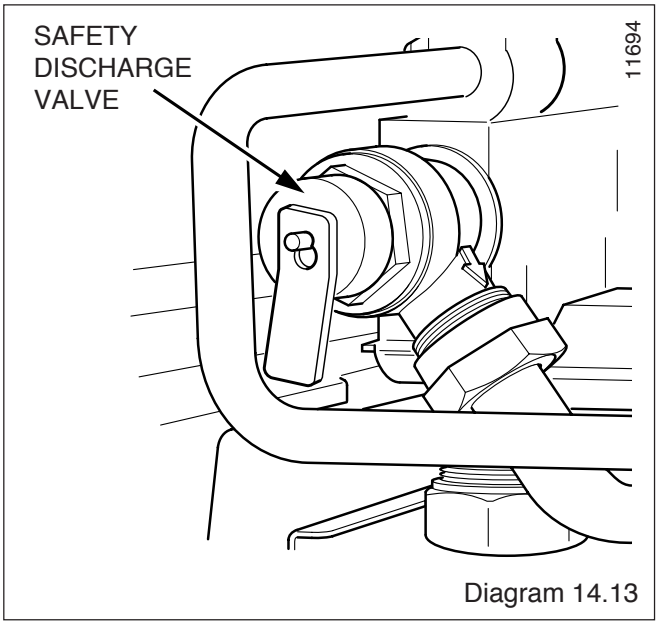

Diagram 14.13

14.17 Domestic Hot Water Thermistor

For access, refer to section 14.1.

Refer to section 12.10 and drain the boiler domestic hot water circuit.

Refer to diagram 14.14.

Disconnect the domestic hot water thermistor electrical connections

Remove hot water thermistor and retaining clip.

Remove domestic hot water thermistor from clip.

NOTE: When reconnecting electrical connections, polarity is not important.

Carry out a functional test of the controls.

14.18 Heating Flow Thermistor

For access, refer to section 14.1.

Refer to diagram 14.15.

Remove the electrical connections from the thermistor.

Remove the retaining clip from the flow pipe.

NOTE: When reconnecting, the polarity of the wiring to thermistors is not mportant.

14.19 Heating Return Thermistor

For access, refer to section 14.1.

Refer to diagram 14.15.

Remove the electrical connections from the thermistor.

Remove the retaining clip from the return pipe.

NOTE: When reconnecting, the polarity of the wiring to thermistors is not important.

14.20 Overheat Thermostat

For access, refer to section 14.1.

Refer to diagram 14.15.

Remove the electrical connections from the overheat thermostat.

Remove the retaining clip from the flow pipe.

Remove the overheat thermostat from the retaining clip.

NOTE: When fitting new thermostat, please ensure that it is located correctly onto the flat area of the pipe and the retaining clip is secure.

14.21 Automatic Air Vent

For access, refer to section 14.1.

Refer to section 12.9 and drain the boiler heating circuit.

Refer to diagram 14.16.

Unscrew the automatic air vent.

Fit the new automatic air vent and 'O' ring ensuring the vent cap is left loose.

Refill, vent and pressurise the boiler.

Check for leaks.

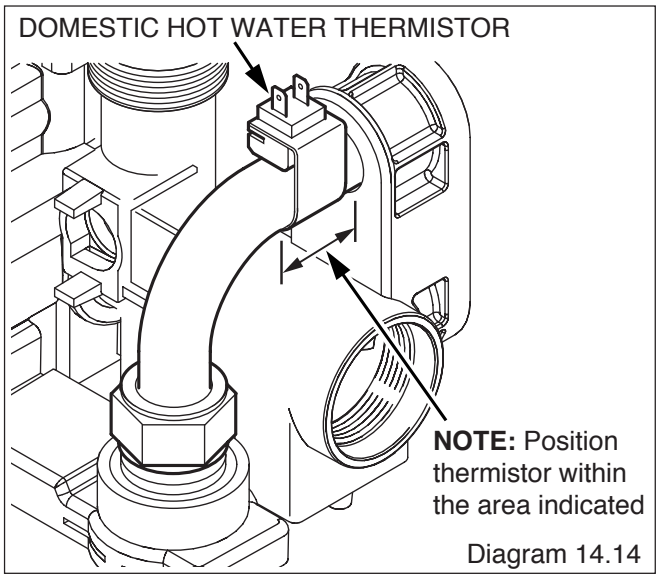

Diagram 14.14

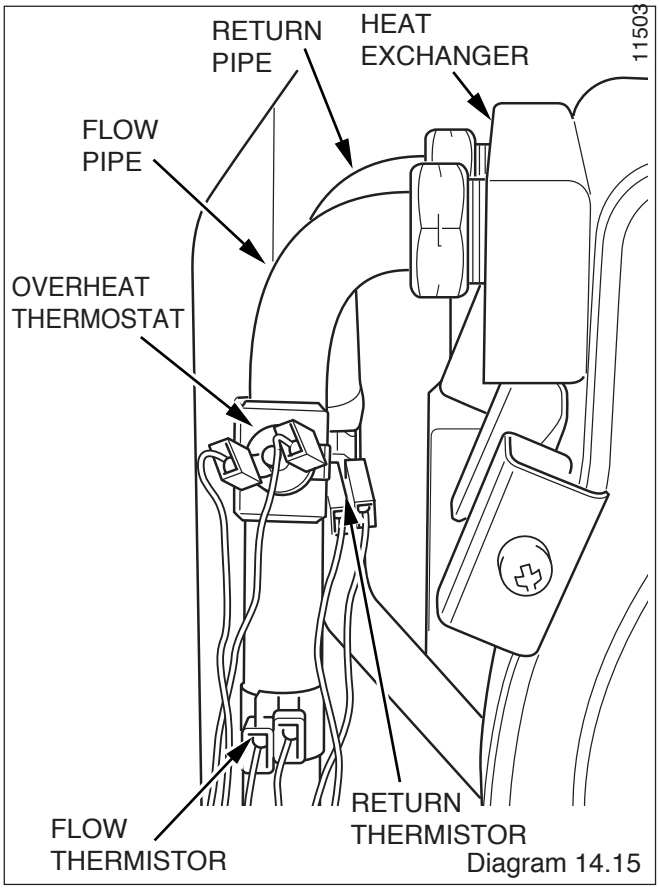

Diagram 14.15

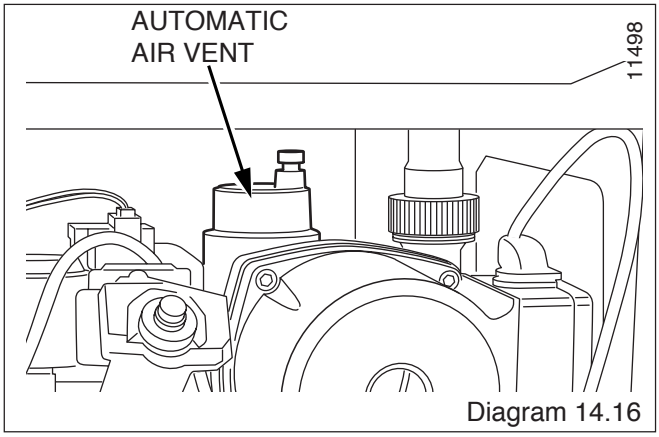

Diagram 14.16

14.22 Flow Sensor

For access, refer to section 14.1.

Refer to section 12.10 and drain the boiler hot water circuit.

Refer to diagram 14.17.

Remove the clip securing the filling loop tube to the domestic water filter housing, see diagram 14.20.

Pull the tube forward to disengage it before rotating it down and out of the way.

Undo the brass securing nut above the cold water inlet valve.

Remove the securing clip between the domestic water filter housing and the flow sensor, see diagram 14.17.

Disengage the domestic water filter housing by lifting it up and out.

Remove the electrical connection to the flow sensor.

Remove the securing clip between the flow sensor and the hydroblock.

Remove flow sensor.

Fit new 'O' rings.

After replacing the flow sensor, open the cold-water isolation valve and slowly open a hot water tap to remove air.

Close the hot water tap and check for any leaks.

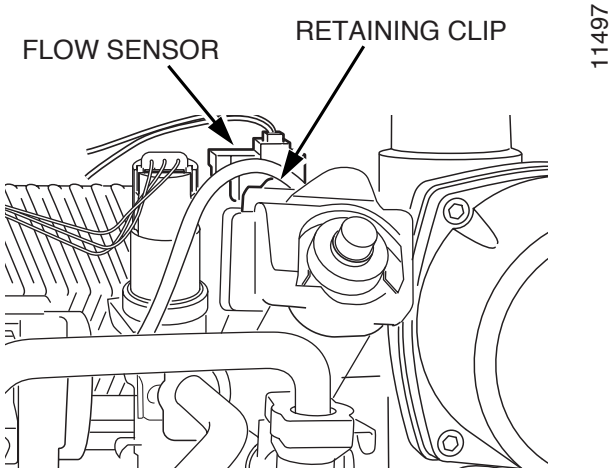

Diagram 14.17

14.23 Low Water Pressure Sensor

For access, refer to section 14.1.

Refer to section 12.9 and drain the boiler heating circuit.

Refer to diagram 14.18.

Disconnect the electrical lead by pushing up retaining tab to withdraw the lead plug.

Remove the retaining clip to remove the low water pressure sensor.

Fit new 'O' ring.

Fit the new low water pressure sensor. Refill vent and pressurise the boiler.

Check for leaks.

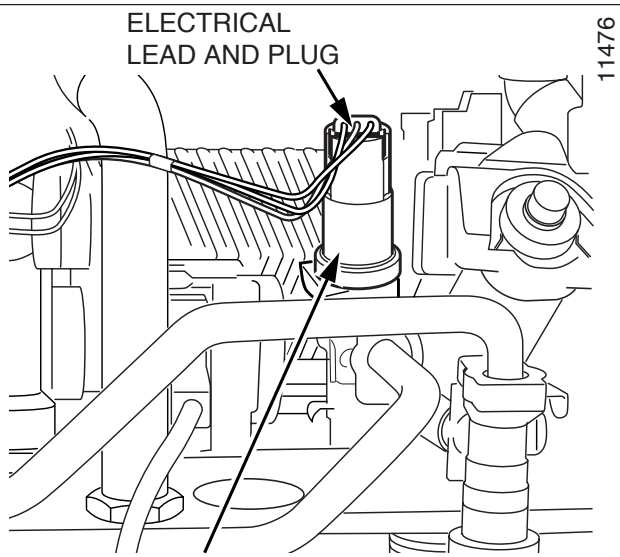

Diagram 14.18

14.24 Bypass

For access, refer to section 14.1.

Refer to section 12.9 and drain the boiler heating circuit.

Refer to diagram 14.19.

Remove the retaining clips to remove the bypass tube.

Fit new 'O' rings.

Replace the bypass tube, refill, vent and pressurise the boiler.

Check for leaks.

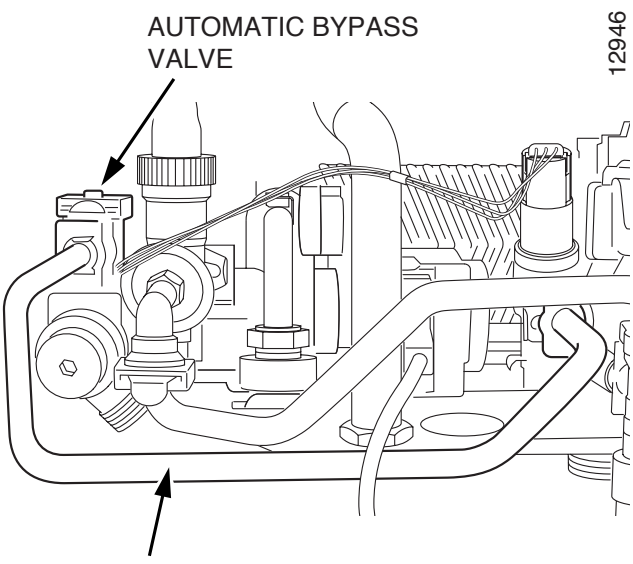

Diagram 14.19

14.25 Filling Loop Tube

For access, refer to section 14.1.

Refer to section 12.10 and drain the boiler hot water circuit.

Refer to diagram 14.20.

Remove the retaining clips to remove the filling loop tube.

Fit new 'O' rings.

After replacing the filling loop tube open the cold-water isolation valve and slowly open a hot water tap to remove air. Close the hot water tap and check for any leaks.

14.26 Filling Loop Valve.

For access, refer to section 14.1.

Refer to section 12.10 and drain the boiler hot water circuit.

Refer to diagram 14.20.

Remove the clip securing the filling loop valve to the domestic water filter housing. Disengage by pulling forward.

Remove the clip securing the filling loop to the filling loop valve.

Remove the filling loop valve from the filling loop.

Fit new 'O' rings.

After replacing the filling loop valve open the cold water isolation valve and slowly open a hot water tap to remove air. Close the hot water tap and check for any leaks.

14.27 Automatic Bypass Valve

For access, refer to section 14.1.

Refer to section 12.9 and drain the boiler heating circuit.

Refer to diagram 14.19.

Remove the retaining clip to remove the bypass valve.

Fit new 'O' rings.

Replace the bypass valve, refill, vent and pressurise the boiler.

Adjust the bypass as described in commissioning, see section 11.6.

Check for leaks.

14.28 Reduced Pressure Zone Valve

For access, refer to section 14.1.

Refer to diagram 14.21.

Refer to section 14.25 to remove the filling loop

Remove the retaining clip to remove the reduced pressure zone valve.

Fit new 'O' rings.

Replace the reduced pressure zone valve, refill, vent and pressurise the boiler.

Check for leaks.

14.29 Domestic Cold Water Inlet Filter

For access, refer to section 14.1.

Refer to section 12.7.

Fit new 'O' rings.

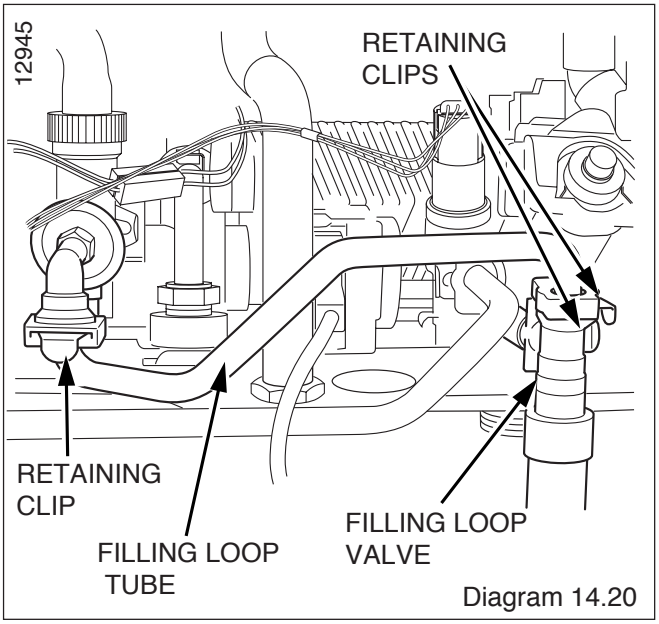

Diagram 14.20

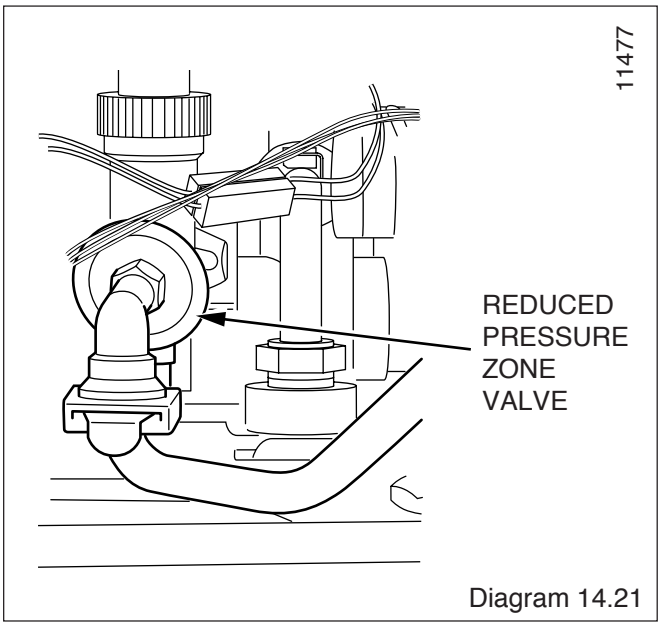

Diagram 14.21

14.30 Central Heating Filter

Refer to section 12.8.

Fit new 'O' rings.

14.31 Heating Circuit Drain Point

Refer to section 12.9 to drain the boiler heating circuit.

Refer to diagram 14.22.

Remove the retaining clip to remove the drain point.

Fit new 'O' rings.

Replace the drain point, refill, vent and pressurise the boiler.

Check for leaks.

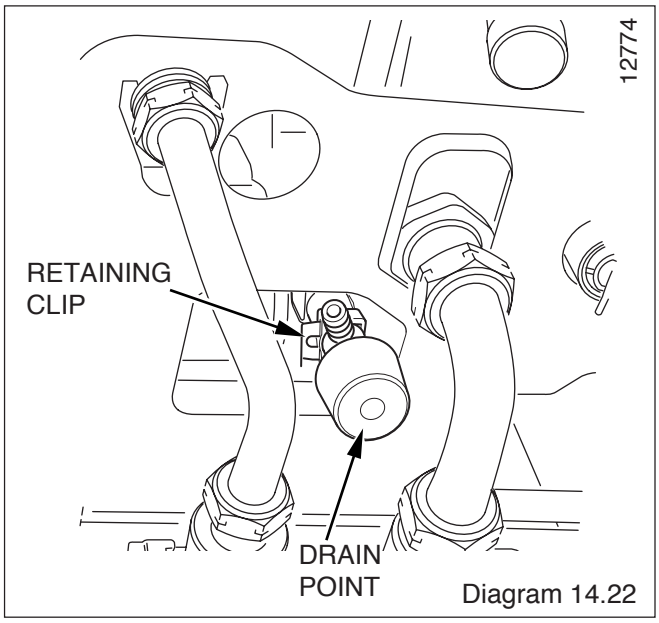

Diagram 14.22

14.32 Inner Casing Panel Seal

For access, refer to section 14.1.

Refer to diagram 12.11.

Remove the inner casing panel.

To replace remove the old seal, thoroughly clean the casing surfaces. Fit the new seal, it is supplied to the correct length.

Refit the inner casing panel.

NOTE: Ensure the seal is fitted correctly giving an airtight joint.

14.33 Plate-to-Plate Heat Exchanger

For access, refer to section 14.1.

Refer to section 12.9 to drain the boiler heating circuit.

Refer to section 12.10 and drain the boiler hot water circuit.

Refer to diagram 14.23.

Remove the gas supply pipe from the gas service cock and the gas valve, refer to relevant parts of section 12.3.

Undo the central heating flow pipe connection into the left hand hydroblock, see diagram 14.23.

Undo the nut connecting flow pipe to heat exchanger, see diagram 14.15.

Lift it up to remove it from the hydroblock with the washer and rotate it forward and out of the way.

Using a TORX screwdriver remove the two screws securing the plate-to-plate heat exchanger to the hydroblock.

Remove the plate-to-plate heat exchanger by lifting it up and over the top of the left hand hydroblock.

When replacing the plate-to-plate heat exchanger ensure that the four rubber sealing washers are fitted into the hydroblock.

NOTE: The plate-to-plate heat exchanger only fits one way round, 'TOP' is marked on the plate.

Refill, vent and pressurise the boiler.

Open the cold-water isolation valve and slowly open a hot water tap to remove air.

Close the hot water tap and check for any leaks.

Open the heating circuit isolation valves, re-pressurise the system as necessary.

14.34 Hydroblock Assembly Left-Hand

Refer to section 12.9 to drain the boiler heating circuit.

Refer to section 12.10 and drain the boiler hot water circuit.

Refer to diagram 14.23.

Undo the connector on the bottom of the flow pipe from the hydroblock.

Undo the nut connecting flow pipe to heat exchanger.

Lift the flow pipe up out of the way.

Remove the filling loop tube, refer to section14.25.

Remove the reduced pressure zone valve, refer to section 14.28.

Remove the bypass tube, refer to section 14.24.

Undo the safety discharge valve union and remove the pipework.

Remove the securing clip and withdraw the safety discharge valve, refer to section 14.16.

Remove securing clips 1 and 2 below hydroblock, see diagram 14.23.

Undo three securing screws on the underside of the left-hand hydroblock.

Remove the diverter valve motor as described in section 14.14.

Remove left hand hydroblock from plate-to-plate heat exchanger using a TORX screwdriver to remove the securing screw, see diagram 14.23.

Lift out the left hand hydroblock.

Remove the remaining components for refitting into the replacement left hand hydroblock.

Refill, vent and pressurise the boiler.

Open the cold water isolation valve and slowly open a hot water tap to remove air. Close the hot water tap.

Check for any leaks.

14.35 Hydroblock Assembly Right-Hand

For access, refer to section 14.1.

Refer to section 12.9 to drain the boiler heating circuit.

Refer to section 12.10 and drain the boiler hot water circuit.

Refer to diagram 14.23.

Undo the connector on the bottom of the return pipe from the hydroblock.

Undo the nut connecting return pipe to heat exchanger.

Lift the return pipe up out of the way.

Undo the coupling at the base of the expansion vessel, see diagram 14.8.

Remove the clip holding the expansion vessel coupling into the top of the right hand hydroblock.

Move the coupling out of the way.

Remove pump head, refer to section 14.15.

NOTE: It is not necessary to disconnect the electrical lead but put pump head in a convenient place where it will not strain the lead.

Remove the filling loop tube, refer to section 14.25.

Remove the bypass tube, refer to section 14.24.

Remove the electrical connections to the flow sensor and the low water pressure sensor, refer to sections 14.22 and 14.23.

Remove the water connection clips 3 and 4 below the hydroblock, see diagram 14.23.

Remove the central heating filter, refer to section 12.8.

Remove the retaining clip to remove the drain point, refer to section 14.31.

Undo two securing screws on underside of the right hand hydroblock.

Remove right hand hydroblock from plate-to-plate heat exchanger using a TORX screwdriver to remove the securing screw, see diagram 14.23.

Lift out the right hand hydroblock.

Remove the remaining components for refitting into the replacement right hand hydroblock.

Refill, vent and pressurise the boiler.

Open the cold-water isolation valve and slowly open a hot water tap to remove air. Close the hot water tap.

Check for leaks.

14.36 Access to Switches, User Interface and Programmer

For access, refer to section 14.1.

Release the front of the fascia by carefully prising up the two retaining latches, see diagram 14.26.

Do not allow the front of the fascia to swing down and be loosely held by the electrical connections to the mains/reset switch, user interface and clock. Either remove the connections or support the fascia.

14.37 Programmer (if fitted)

Refer to section 14.38 for access.

Remove electrical plug.

Undo two securing screws and withdraw programmer.

14.38 Diverter Valve Motor

For access, refer to section 14.1.

Refer to section 12.9 and drain the boiler heating circuit.

Refer to section 12.10 and drain the boiler hot water circuit.

Remove the diverter valve motor as described in section 14.14.

Refer to section 14.35 to remove the left hand hydroblock.

Unscrew and remove both halves of the diverter valve from the left hand and right hand sides of the hydroblock, see diagram 14.24.

When replacing the two halves of the diverter valve it is important to ensure the spindle is located correctly. This can be observed with the left hand hydroblock removed.

14.39 Mains Reset Switch

Refer to section 14.38 for access.

Remove the switch retaining screw.

Remove switch from housing, see diagram 14.25.

Remove electrical leads.

14.40 Mains Reset Knob

Refer to section 14.38 for access.

Remove actuator by springing back retaining clips, see diagram 14.25.

Spring back knob retaining clips and push knob out from the back.

14.41 Main PCB

For access, refer to section 14.1.

Hinge down the control box.

Remove TORX screws and unhook the rear panel.

Remove the electrical connections to the PCB.

Prise back the two PCB retaining clips and withdraw the PCB, see diagram 14.26.

When refitting the rear panel ensure the leads are not trapped, refer to diagram 14.26.

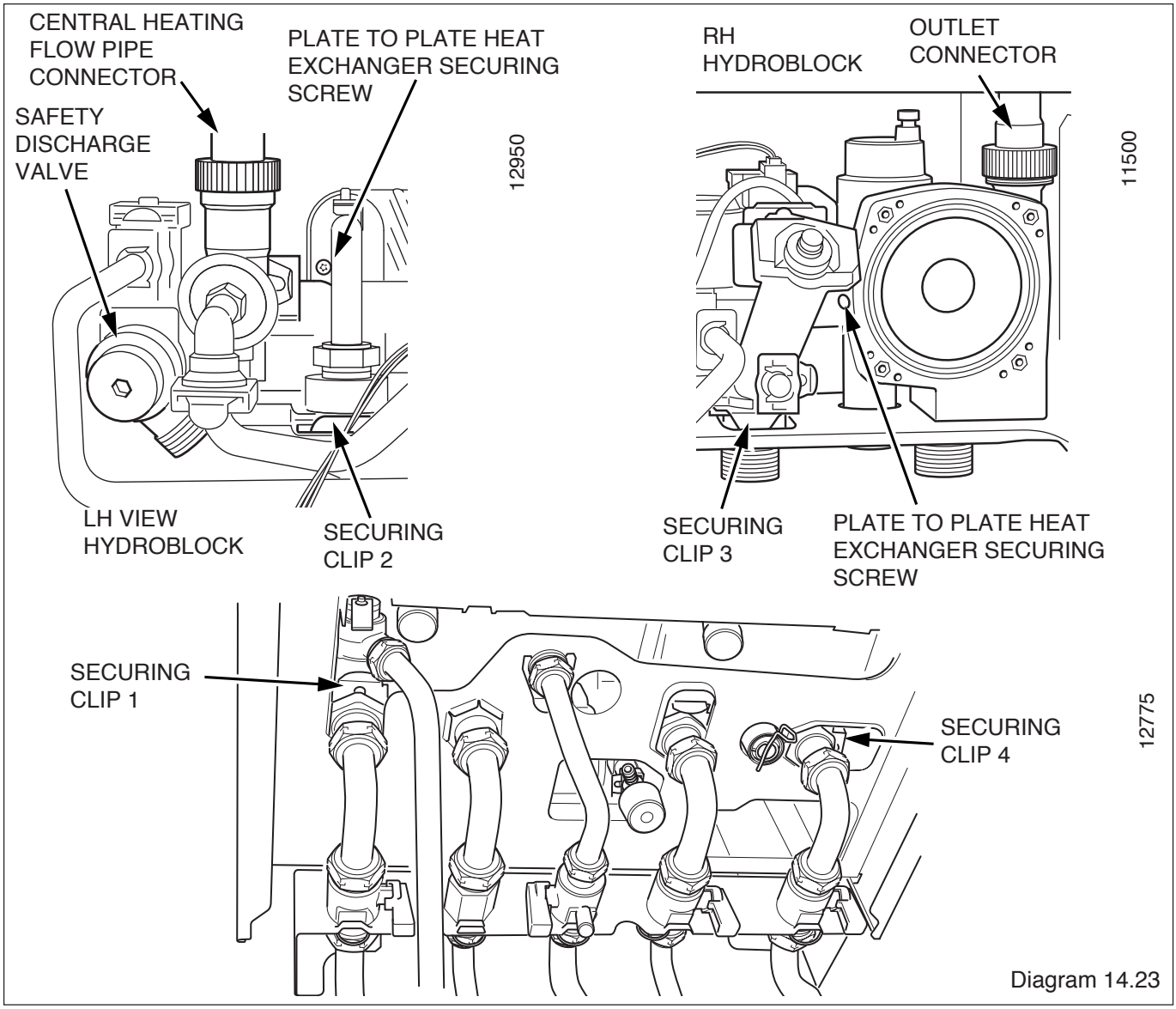

Diagram 14.23

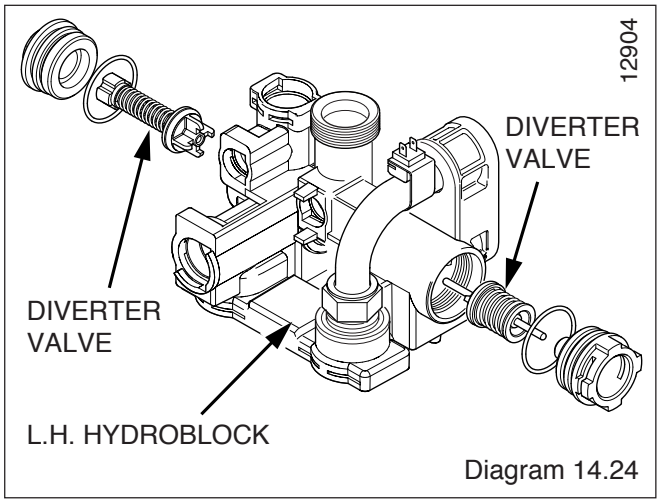

Diagram 14.24

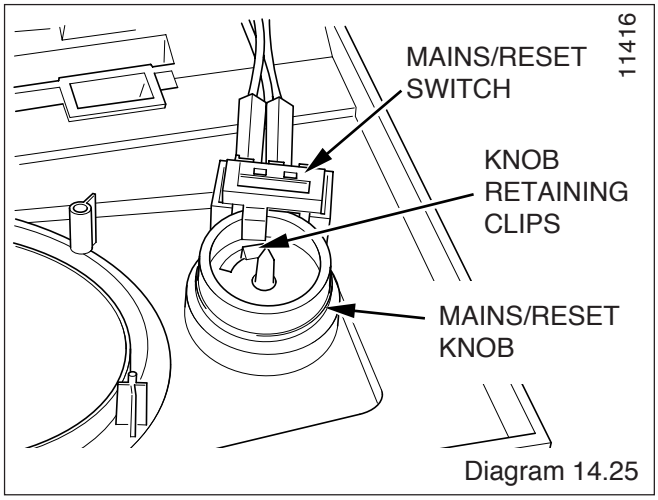

Diagram 14.25

14.42 Control Box

For access, refer to section 14.43.

Remove relevant plugs and connectors, refer to wiring diagram 13.1.

Withdraw grommets and leads so they are hanging loose.

Unthread the retaining cord and remove the control box by drawing it outwards away from its retaining slots, see diagram 14.26.

14.43 Fuse, Main PCB - Control Box

For access, refer to section 14.43.

The fuse is located at bottom right hand side of the PCB, see diagram 13.1 or 14.26.

14.44 User Interface

Refer to section 14.38 for access.

Remove electrical plug.

Remove the securing screws, see diagram 14.27.

Withdraw the board.

When replacing the board refer to instructions supplied with replacement PCB on setting it up.

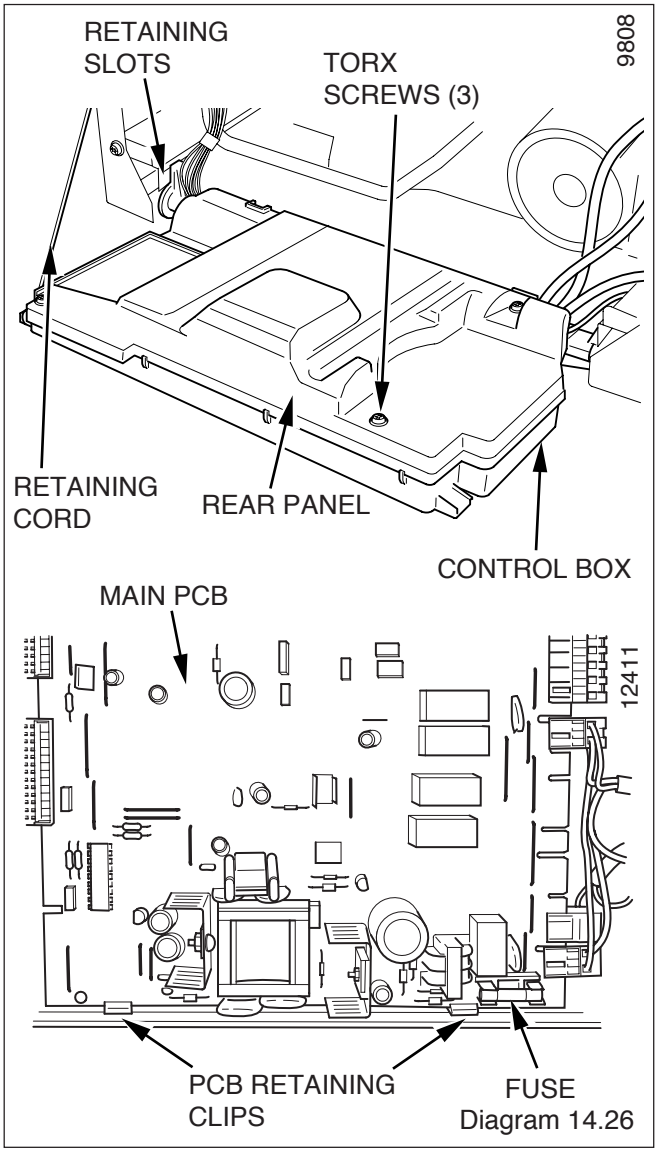

Diagram 14.26

14.45 230V Controls Interface

For access, refer to section 14.38.

Disconnect the electrical connection from the 230V controls interface board and the electrical connection from the Main PCB.

Remove the 230V controls interface retaining screw.

Remove the 230V controls interface board, see diagram 14.28.

14.46 Condense Drain

For access, refer to section 14.1.

Refer to diagram 14.29.

Remove the clips securing the flexible tubes to the siphon adapter by twisting the clips slightly to disengage the clip jaws from each other.

Remove black flexible tubes from siphon adapter.

Lift off the siphon adapter.

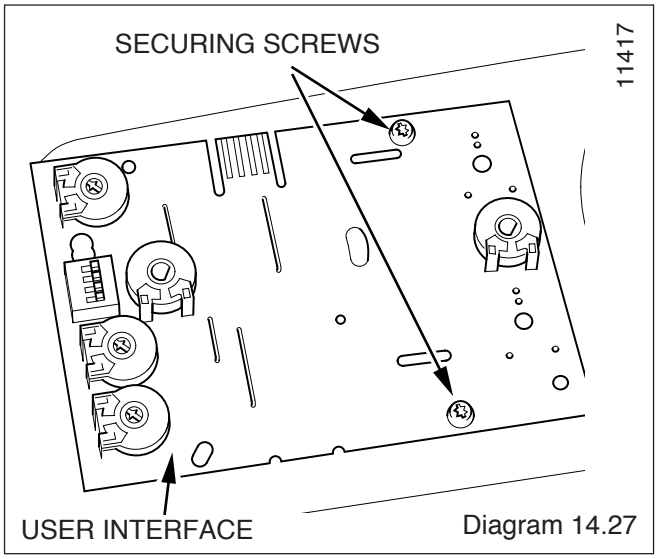

Diagram 14.27

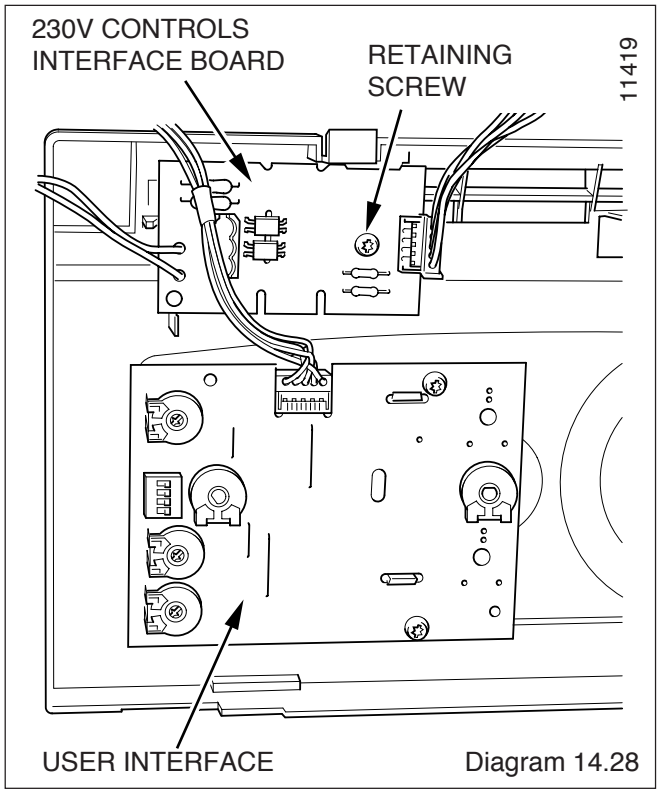

Diagram 14.28

15 Spare Parts

Remove the drain connection downstream of the condense trap.Remove the two condense trap securing screws. Lift up and carefully remove the condense trap taking care not to spill any water which may be left in the unit. As the unit is lifted remove the flexible pipe on the outlet.

Remove the cap at the base of the condense trap.

Remove any solids found.

Remove the float to clean it.

Flush water through the trap to remove any remaining solids.

Check for any debris in the outlet pipe of the condensate drain and clean as necessary.

Reassemble and refit the condense trap.

When refitting the cap ensure that a watertight seal is achieved, but do not use excessive force.

Remove the siphon adaptor from the flexible tubes, using a suitable container, flush the heat exchanger until the water appears clear in the container.

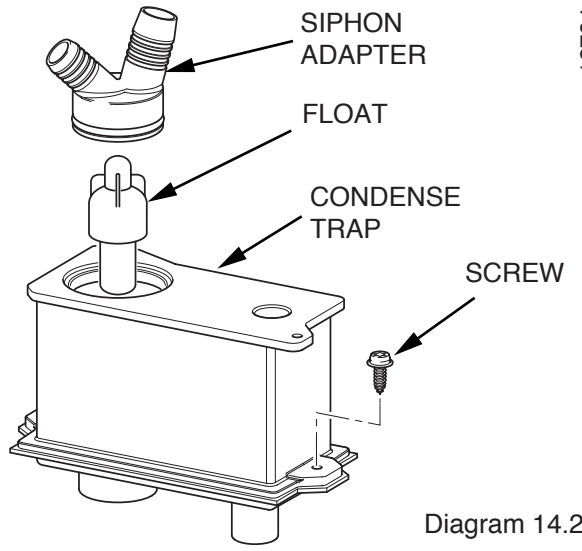

Diagram 14.29

15 Spare Parts

When ordering spare parts, contact Glow-worm's own service organisation using the telephone number on the inside front cover of this booklet.

Please quote the name of the appliance and serial number, to be found on the data label.

If ordering from British Gas also quote the G.C. number of the part.

Key No.	Part No.	Description	GC Part No.
1	801724	Overheat Thermostat	E83996
2	2000801911	System Pressure Sensor	E83997
3	2000801831	Plate to Plate Heat Exchanger	E83998
4	801192	Diverter Valve Motor	E27211
5	801637	Electrode	E83999
6	2000801904	Safety Discharge Valve	E84000
7	2000801898	Automatic Air Vent	E84001
8	2000801897	Central Heating Filter	E84002
9	801722	Heating flow thermistor /Heating return thermistor	E84003
10	801649	Gas valve	E84004
10	802172	Gas valve (38cxi only)	E97505
11	801809	Mains Reset Switch	E84794
12	801906	Domestic Cold Water Inlet Filter	*
13	2000801910	Flow Sensor	E84014
14	801655	Igniter Unit	E84015
15	2000801909	By-pass	E84016
16	2000801923	230V Controls Interface	E84018
17	4000124180	Main P.C.B.	E84019
18	2000801380	Pump (head only)	E88868
19	801645	Fan	E84024
20	2000802643	User Interface 24cxi	E84020
20	2000802644	User Interface 30cxi	*
20	2000802645	User Interface 38cxi	*
21	801632	24cxi Burner	E84021
21	2000801840	30cxi Burner	E88867
21	2000802662	38cxi Burner	*

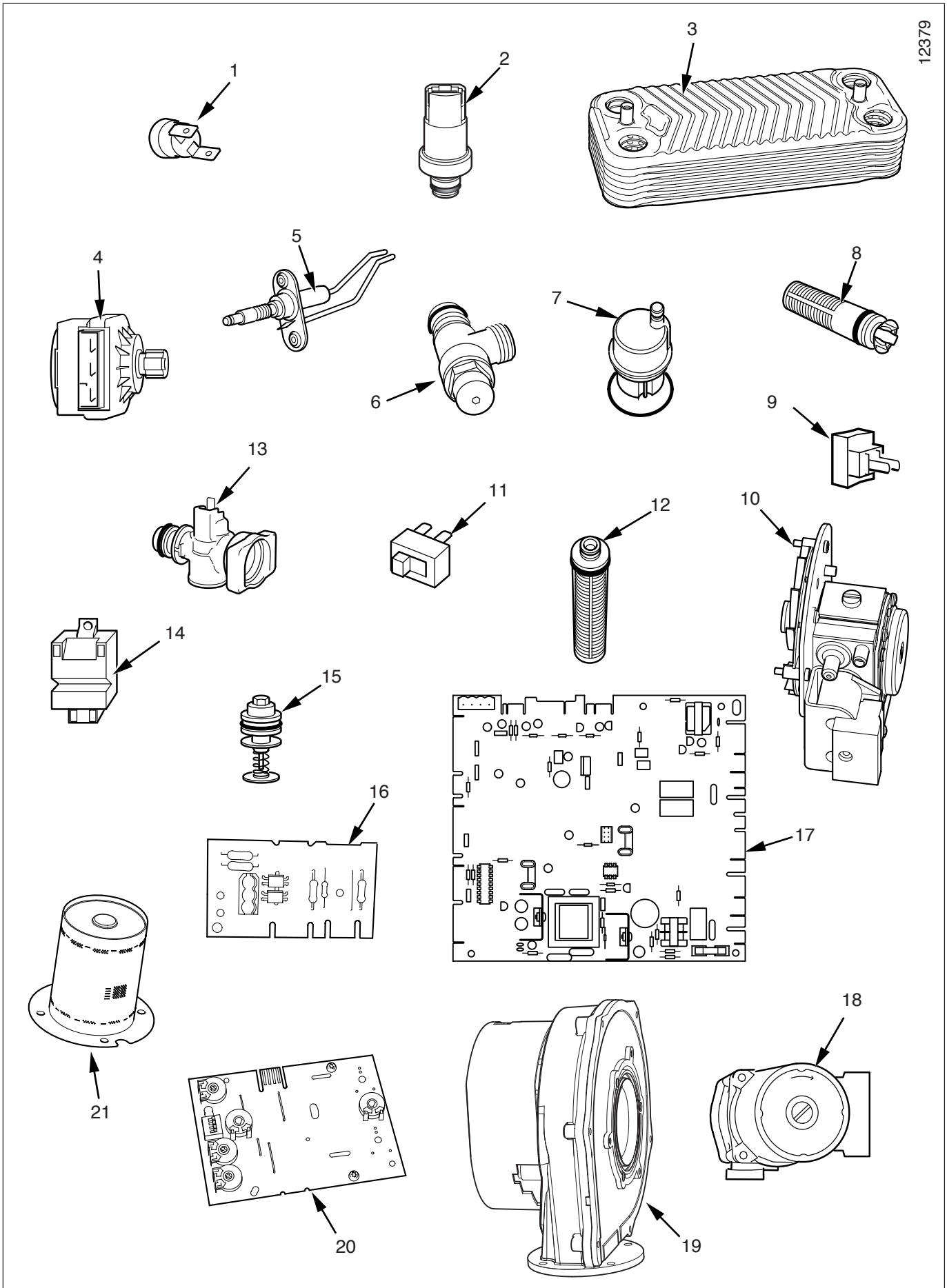

Diagram 15.1

Because of our constant endeavour for improvement, details may vary slightly from those shown in these instructions.